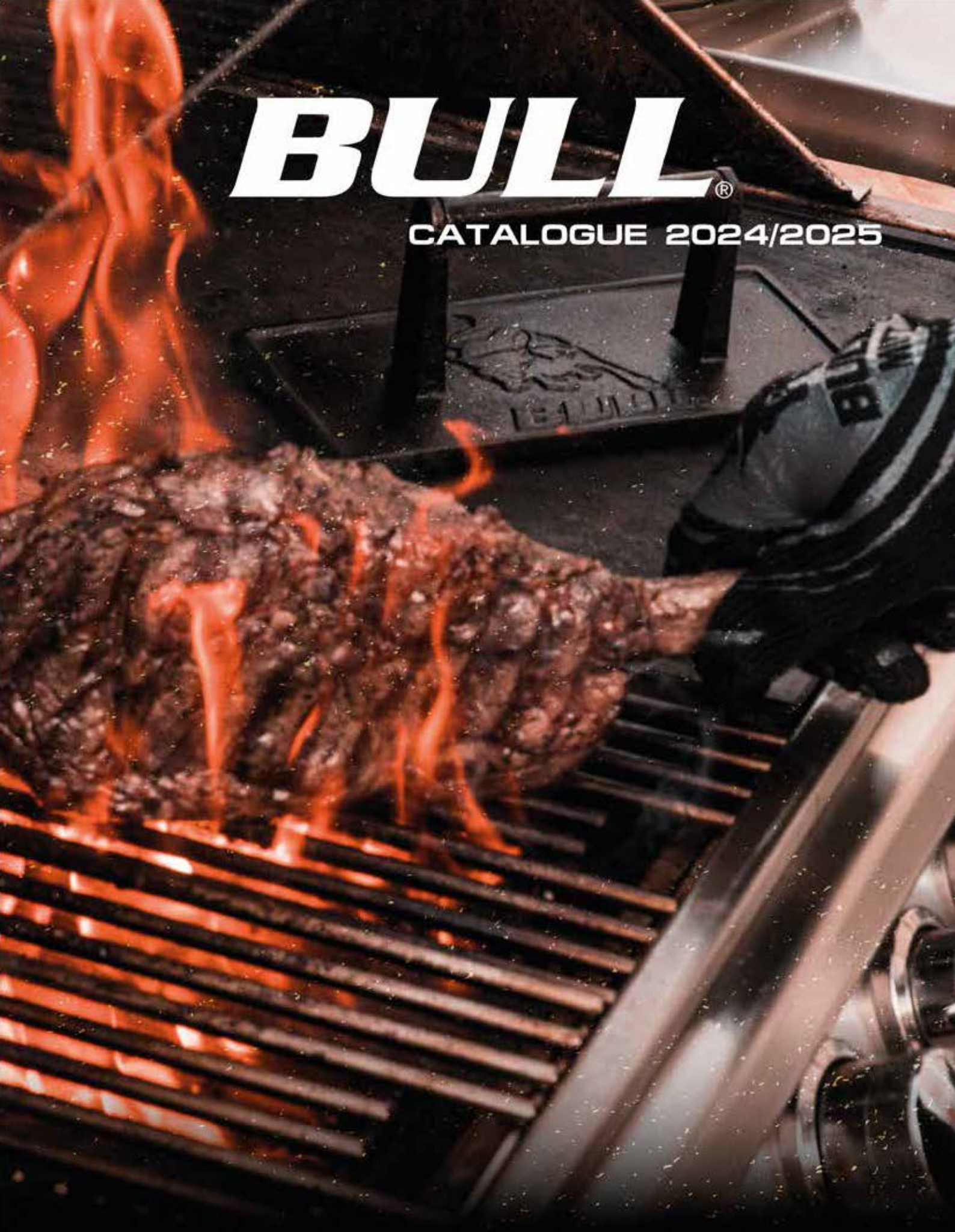

BULL®

CATALOGUE 2024/2025

THE LAST GRILL YOU'LL EVER BUY

www.bullbbq.eu

DEPARTMENT	E-MAIL
GENERAL ENQUIRIES	INFO@BULLBBQ.EU
TECHNICAL ENQUIRIES	AFTERSALES@BULLBBQ.EU
ACCOUNTS ENQUIRIES	ACCOUNTS@BULLBBQ.EU
SALES ENQUIRIES	ORDERS@BULLBBQ.EU
MARKETING ENQUIRIES	MARKETING@BULLBBQ.EU

PHONES	
GENERAL ENQUIRIES	+356 9979 2077
SERVICING ENQUIRIES	+356 2279 2077

Bull Europe Limited Postal Address:

Unit 41 - Industrial Estate - San Gwann - SGN3000 - Malta

ABOUT BULL

BECOME A DEALER

FIND A DEALER

TABLE OF CONTENTS

CONTACT INFO	PAGE 2
TABLE OF CONTENTS	PAGE 3
KNOW BULL	PAGE 4
BULL EUROPE TIMELINE	PAGE 5
WHY BULL?	PAGE 6-7
BULL GRILLS	PAGE 8-25
OVERVIEW	PAGE 9
CARTS / BUILT-IN	PAGE 10-21
GRILL ENHANCEMENTS	PAGE 22-24
COVERS	PAGE 25-26
BULL PIZZA OVENS	PAGE 27-33
PIZZA OVENS	PAGE 27-31
COVERS	PAGE 32-33
COMPONENTS	PAGE 34-54
OUTDOOR KITCHENS	PAGE 55-67
OUTDOOR FIRE TABLES	PAGE 68-69
OUTDOOR BARS	PAGE 70-71
OUTDOOR KITCHEN FINISHES	PAGE 72-74
CARE AND MAINTANANCE	PAGE 75-76
ACCESSORIES	PAGE 77
NOTES	PAGE 78-80
SKETCH PADS	PAGE 81-83

"Since installing a Bull barbeque at home, I have discovered what US-style grilling is all about. One of the Bull slogans is 'changing the way you barbeque' - it makes grilling faster and easier. The Bull philosophy for grilling is to cook with your guests and not for them. Personally, my favorite activity is gathering with my friends and family, having a laugh and eating together. With work taking up so much time in my life, I treasure those gatherings immensely. Plus, I make a mean pork hock with crackling!"

Bull Europe President, Sandro Zammit

KNOW QUALITY

Bull's award–winning grills are designed, engineered in California, and master–crafted to meet certifications from CSA and CE, which means anyone with a Bull grill can take comfort in knowing that they're cooking with the highest quality, premium grill on the market.

KNOW COMMITMENT

It's not enough to just say you're committed, Bull backs it up. From the 2mm thick 304 stainless steel used on every grill to the Lifetime Warranty* that covers fire boxes and cooking grates, Bull is committed to going the extra mile to provide you the ultimate outdoor cooking experience.

KNOW SERVICE

Bull provides a premium outdoor cooking experience that is manufactured with the highest quality materials. Bull maintains a complete in–house parts department with knowledgeable specialists available to answer any question imaginable. When you purchase a Bull Outdoor product, not only will you know it is made with expert precision, but you'll have Bull's dependable and responsive service department waiting to assist you.

Fact is, when you purchase a premium Bull grill, you're getting a commitment to the highest–quality product and reliable service in the market. Period. Our grills and components are built to last a lifetime and that's why we guarantee that your Bull grill will be the last one you ever purchase.

And that's exactly why we say ... **Know Bull.**

2013

AGP Systems Ltd. becomes the first Bull dealer in Malta. Established since 1995 and having gathered extensive experience in design, installation and servicing of foodservice catering equipment, the Bull brand quickly made its way into the Maltese market. Bull Inc. were encouraged to invest in a European Distribution Project.

2014

The two companies meet for the first time in Bull HQ, Rialto CA. An agreement was reached to set up a Distribution hub jointly, to serve the EMEA region. As Bull are renowned for their Deliverable Quality Outdoor Kitchens, the construction of these was undertaken by the manufacturing arm of the AGI Group in Malta, Zamco Caterware Ltd. (Est.1975). It's existing plant in Malta and experience in the industry, could guarantee that Bull Outdoor Kitchens produced would be up to the standard expected from the Bull brand.

2015

Bull Europe was established.

The Bull Outdoor Kitchens Team in Malta manufactured its first Outdoor Kitchens. The Deliverable Outdoor Kitchen concept was a huge success, and a numerable standard and custom kitchens were installed in various locations in Malta. Bull Europe hosts the first group of candidate Authorised Dealers from Europe in Malta. Many Dealers sign up immediately.

2016

Extensive changes were made to the CE grills and new components were developed by Bull for the EMEA markets. Bull Europe sets up at Spoga Gafa in Cologne for the first time. Bull was the only booth presenting the Plug & Play Outdoor Kitchen Concept. This gave the company a huge boost and helped the European Distribution Network grow very rapidly.

2017

The Bull Team in Malta mastered the art of working with Solid Ceramic Large format tile known as Gres and clad entire Outdoor Kitchen Bases and Tops, giving Kitchens a fresh, contemporary European look.

EMEA Sales Doubled.

2018

In Spoga Gafa 2018, Bull Europe amazed visitors with its contemporary European style finishes. Bull Europe's distribution network expanded to 25 countries with 11 distributors and over 80 dealers throughout the EMEA. Warehousing facilities in Malta increased to 1000 sq. mts Footprint.

2019

The Bull Europe Team is enhanced with substantial investment in human resources on the manufacturing floor, logistics, sales, marketing, and after-sales service. The Outdoor Kitchen manufacturing facility is doubled in area to cope with the increasing demand.

2021

Bull Europe continues to grow despite the global shipping crisis and pandemic. Bull Europe increases its presence in Europe and establishes a strong distribution network in the Middle East.

EMEA Sales Quadrupled From 2019.

RELIABULL

When you buy a grill, don't you think you should be able to use the whole thing? At Bull Outdoor, we think so. That's why, with the help of the engineering experts at California Polytechnic, we created the ReliaBULL technology.

THE AVERAGE GRILL:

Typical grills feature unpredictable heating across the surface.

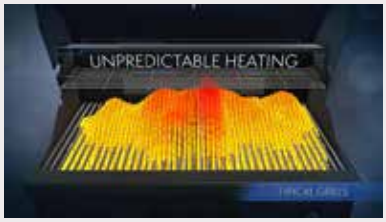

WITH OUR RELIABULL TECHNOLOGY:

We have eliminated cold spots on your grill, making your outdoor grilling experience extraordinary.

This new technology improves heat distribution on your grill by 50%. The ReliaBULL flame tamers create a more even grilling surface, eliminating cold spots, so that you can use your entire grilling surface.

TAKE A CLOSE LOOK AT THE LAST GRILL YOU WILL EVER BUY

ANGUS GRILL HEAD

KNOW BULL.
LIFETIME
WARRANTY
PLEASE REFER TO WARRANTY DOCUMENT

Bull is so confident in its fabulous line–up of premium outdoor grills that Lifetime Warranties* come standard on all fire boxes, cooking grates and on all cast stainless steel burners.

With ten durable grill heads to choose from, Bull has the perfect grill just for you.

* Specific warranty details provided with each Bull product.

BULL

BULL GRILLS				
STANDARD FEATURES	**STEER**	**OUTLAW**	**LONESTAR**	**ANGUS**
Cooking Power	13.2 kWh	17.6 kWh	17.6 kWh	22 kWh
Burners	3 - Welded S/Steel Bar Burners	4 - Cast Iron Bar Burners	4 - Welded S/Steel Bar Burners	4 - Cast S/Steel Bar Burners
Rotisserie Kit	Optional #66000CE	Optional #46000CE	Optional #46000CE	✓
Cast Stainless Steel Side Burners	Optional #60010CE Side Kick Side Burner	Optional #60010CE Side Kick Side Burner	Optional #60010CE Side Kick Side Burner	Optional #60010CE Side Kick Side Burner
304 Stainless Steel Thickness	2mm	2mm	2mm	2mm
Solid Stainless Steel Grates	✓	✓	✓	✓
Lights	✗	✗	✓	✓
Lower Cooking Surface Upper Cooking Rack	60cm x 49cm 60cm x 18cm	76cm x 49cm 76cm x 18cm	76cm x 49cm 76cm x 18cm	76cm x 49cm 76cm x 18cm

BULL GRILLS				
STANDARD FEATURES	**RENEGADE**	**BRAHMA**	**DIABLO**	**7 BURNER**
Cooking Power	22 kWh	26.4 kWh	30.8 kWh	30.8 kWh
Burners	5 - Cast Iron Bar Burners	5 - Cast S/Steel Bar Burners	6 - Cast S/Steel Bar Burners	4 - Cast S/Steel Bar Burners
Rotisserie Kit	Optional #56000CE	✓	✓	✓
Cast Stainless Steel Side Burners	Optional #60010CE Side Kick Side Burner	Optional #60010CE Side Kick Side Burner	Optional #60010CE Side Kick Side Burner	Built-in Cast S/Steel Double Side Burners
304 Stainless Steel Thickness	2 mm	2 mm	2 mm	2 mm
Solid Stainless Steel Grates	✓	✓	✓	✓
Lights	✗	✓	✓	✓
Lower Cooking Surface Upper Cooking Rack	97cm x 49cm 97cm x 18cm	97cm x 49cm 97cm x 18cm	115cm x 49cm 115cm x 18cm	76cm x 49cm 76cm x 18cm

BISON CHARCOAL GRILL

The Bison Charcoal Grill has been totally re-engineered for greater performance. The air vent system and gasket features allows for even greater temperature control with the ability to precisely regulate the oxygen flow into the firebox. The roasting hood is insulated to achieve greater temperature stability. Now you can set up the Bull Bison for slow and low cooking, or crank it up to get that steak house quality sear on your steaks and chops.

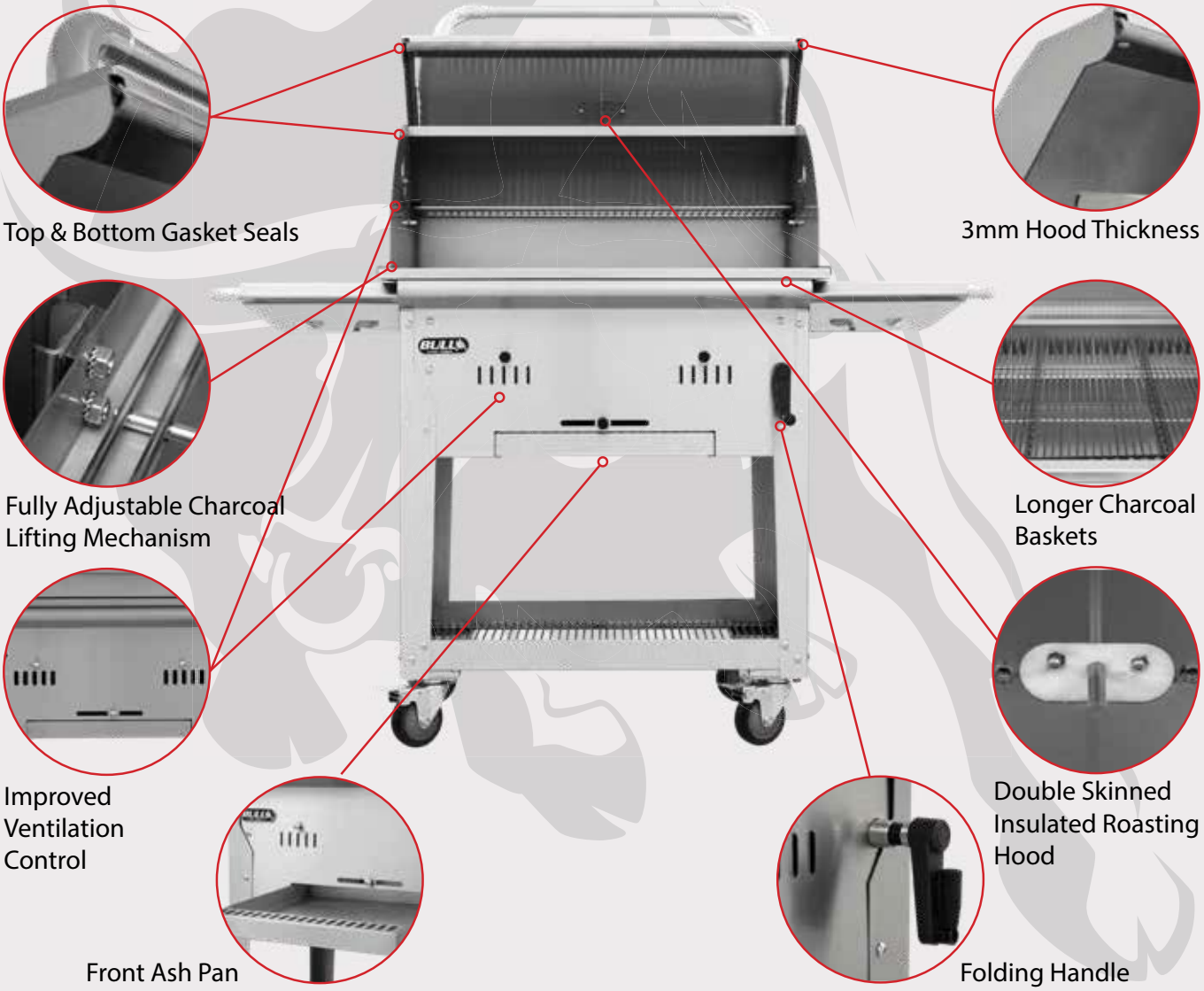

Standard Features	
Bison Cart	#88000
Bison Built - In	#88787CE
Cooking Power	Charcoal
Burners	✗
Infrared Back Burner	✗
Cast Stainless Steel Side Burner	✗
Piezo Igniter	✗
Zinc Knobs	✗
SS 304 Gauge	3 mm
SS Dual Lined Hood	✓
Solid SS Grates	✓
Heavy Duty Thermometer	✓
Solid SS Warming Rack	✓
Rotisserie Kit	✗
SS Grease Tray	✗
SS Side Shelves	✓
Twin Lighting System	✗
SS 304 Double Door Cart	✗
SS 304 Door/Drawer Cart	✗
Heavy Duty Castors	✓
CSA Certified	✓
CE Certified	✓
Lower Cooking Surface	76 x 49 cm
Upper Cooking Surface	76 x 18 cm
Warranty Details	
Fire Box/Roasting Hood	5 Years
Cooking Grates	Lifetime
Burners	✗
Flame Tamers	✗
Grill Packing Dimensions	
Grill Carton Length	87 cm
Grill Carton Width	70 cm
Grill Carton Height	73.5 cm
Grill Carton Cube	0.45 M^3
Grill Carton Weight	55.00 Kg
Cart Packing Dimensions	
Cart Carton Length	80 cm
Cart Carton Width	53 cm
Cart Carton Height	18 cm
Cart Carton Cube	0.76 M^3
Cart Carton Weight	20.00 Kg

BISON CHARCOAL CART

BISON CHARCOAL BUILT-IN

The Bison Grill is constructed of high quality 304 stainless steel, the Bison has an adjustable charcoal basket to set the level of direct heat when grilling. There is a distinct flavour you can only get when using charcoal and the Bison you can achieve that authentic backyard BBQ taste that will make you the grill master in your neighbourhood.

Standard Features	
Plancha Grill Cart	#73008CE-LPG
	#73009CE-NG
Requires #97021Cart Adaptor	
Plancha Built-in	#97008CE-LPG
	#97009CE-NG
Cooking Power	13.2 kWh
Burners	3-Welded S/ Steel Bar Burners
Infrared Back Burner	✗
Cast Stainless Steel Side Burner	Optional #60010CE Side Burner
Piezo Igniter	✓
Zinc Knobs	✓
SS 304 Gauge	1.6 mm
SS Dual Lined Hood	✓
Solid SS Grates	Chrome Plated Cast Iron Griddle
Heavy Duty Thermometer	✗
Solid SS Warming Rack	✗
Rotisserie Kit	✗
SS Grease Tray	✓
SS Side Shelves	✓
Twin Lighting System	✗
SS 304 Double Door Cart	✓
SS 304 Door/Drawer Cart	✗
Heavy Duty Castors	✓
CSA Certified	✓
CE Certified	✓
Lower Cooking Surface	57 x 44cm
Upper Cooking Surface	✗
Warranty Details	
Fire Box/Roasting Hood	Lifetime
Griddle	2 Years
Burners	5 Years
Flame Tamers	✗
Grill Packing Dimensions	
Grill Carton Length	69 cm
Grill Carton Width	65 cm
Grill Carton Height	50 cm
Grill Carton Cube	0.23 m³
Grill Carton Weight	63.00 Kg
Cart Packing Dimensions	
Cart Carton Length	56 cm
Cart Carton Width	58 cm
Cart Carton Height	69 cm
Cart Carton Cube	0.22 M³
Cart Carton Weight	28.00 Kg

PLANCHA CART

PLANCHA BUILT-IN

The Bull Commercial Style Stainless Steel Griddle is a perfect addition to your outdoor kitchen. A chromium plated cook top sits upon three stainless steel burners that pump out 13 kWh of cooking power. From fajitas to pancakes, the food preparation possibilities are virtually endless.

Standard Features	
Steer Cart	#69101CE-LPG
	#69102CE-NG
Steer Built - In	#69008CE-LPG
	#69009CE-NG
Cooking Power	13.2 kWh
Burners	3-Welded S/ Steel Bar Burners
Infrared Back Burner	✗
Cast Stainless Steel Side Burner	Optional #60010CE Side Burner
Piezo Igniter	✓
Zinc Knobs	✓
SS 304 Gauge	2 mm
SS Dual Lined Hood	✓
Solid SS Grates	✓
Heavy Duty Thermometer	✓
Solid SS Warming Rack	✓
Rotisserie Kit	✗
SS Grease Tray	✓
SS Side Shelves	✓
Twin Lighting System	✗
SS 304 Double Door Cart	✓
SS 304 Door/Drawer Cart	✗
Heavy Duty Castors	✓
CSA Certified	✓
CE Certified	✓
Lower Cooking Surface	60 x 49 cm
Upper Cooking Surface	60 x 18 cm
Warranty Details	
Fire Box/Roasting Hood	Lifetime
Cooking Grates	Lifetime
Burners	5 Years
Flame Tamers	5 Years
Grill Packing Dimensions	
Grill Carton Length	74 cm
Grill Carton Width	66 cm
Grill Carton Height	62 cm
Grill Carton Cube	0.32 M^3
Grill Carton Weight	48.00 Kg
Cart Packing Dimensions	
Cart Carton Length	56 cm
Cart Carton Width	58 cm
Cart Carton Height	69 cm
Cart Carton Cube	0.22 M^3
Cart Carton Weight	26.00 Kg

STEER CART

STEER BUILT-IN

The Steer Grill Cart has doors in the front that allow easy access to your propane tank or other items you want to store. It also provides adequate food preparation space on s/steel shelves on either side of the grill.

Standard Features	
Outlaw Cart	#26001CE-LPG
	#26002CE-NG
Outlaw Built-In	#26038CE-LPG
	#26039CE-NG
Cooking Power	17.6 kWh
Burners	4-Cast Iron Porcelain Coated
Infrared Back Burner	✗
Cast Stainless Steel Side Burner	Optional #60010CE Side Burner
Piezo Igniter	✓
Zinc Knobs	✓
SS 304 Gauge	2 mm
SS Dual Lined Hood	✓
Solid SS Grates	✓
Heavy Duty Thermometer	✓
Solid SS Warming Rack	✓
Rotisserie Kit	✗
SS Grease Tray	✓
SS Side Shelves	✓
Twin Lighting System	✗
SS 304 Double Door Cart	✓
SS 304 Door/Drawer Cart	✗
Heavy Duty Castors	✓
CSA Certified	✓
CE Certified	✓
Lower Cooking Surface	76 x 49 cm
Upper Cooking Surface	76 x 18 cm
Warranty Details	
Fire Box/Roasting Hood	Lifetime
Cooking Grates	Lifetime
Burners	2 Years
Flame Tamers	5 Years
Grill Packing Dimensions	
Grill Carton Length	86 cm
Grill Carton Width	66 cm
Grill Carton Height	63 cm
Grill Carton Cube	0.36 M^3
Grill Carton Weight	60.00 Kg
Cart Packing Dimensions	
Cart Carton Length	84 cm
Cart Carton Width	58 cm
Cart Carton Height	53 cm
Cart Carton Cube	0.26 M^3
Cart Carton Weight	33.50 Kg

OUTLAW CART

OUTLAW BUILT-IN

The 80cm Outlaw Cart is a wonderful gas grilling option for the value minded customer who does not want to give up massive cooking power. The cart offers good storage underneath the grill and stainless steel side shelves for food preparation.

Standard Features	
Lonestar Cart	#87001CE-LPG
	#87002CE-NG
Lonestar Built-In	#87048CE-LPG
	#87049CE-NG
Cooking Power-kWh	17.6 kWh
Burners	4-Welded S/ Steel Bar Burners
Infrared Back Burner	✗
Cast Stainless Steel Side Burner	Optional #60010CE Side Burner
Piezo Igniter	✓
Zinc Knobs	✓
SS 304 Gauge	2 mm
SS Dual Lined Hood	✓
Solid SS Grates	✓
Heavy Duty Thermometer	✓
Solid SS Warming Rack	✓
Rotisserie Kit	✗
SS Grease Tray	✓
SS Side Shelves	✓
Twin Lighting System	✓
SS 304 Double Door Cart	✓
SS 304 Door/Drawer Cart	✗
Heavy Duty Castors	✓
CSA Certified	✓
CE Certified	✓
Lower Cooking Surface	76 x 49 cm
Upper Cooking Surface	76 x 18 cm
Warranty Details	
Fire Box/Roasting Hood	Lifetime
Cooking Grates	Lifetime
Burners	5 Years
Flame Tamers	5 Years
Grill Packing Dimensions	
Grill Carton Length	86 cm
Grill Carton Width	66 cm
Grill Carton Height	63 cm
Grill Carton Cube	0.36 M^3
Grill Carton Weight	58.00 Kg
Cart Packing Dimensions	
Cart Carton Length	84 cm
Cart Carton Width	58 cm
Cart Carton Height	53 cm
Cart Carton Cube	0.26 M^3
Cart Carton Weight	33.50 Kg

LONESTAR CART

LONESTAR BUILT-IN

This Grill is a 4-Burner Stainless Steel Gas Barbecue Grill. It has extra storage for a propane tank or other grilling necessities and its food prep areas on either side of the grill leave plenty of room to serve your favourite dishes.

Standard Features	
Renegade Cart	#32300CE-LPG
	#32301CE-NG
Renegade Built-In	#32368CE-LPG
	#32369CE-NG
Cooking Power	22 kWh
Burners	5-Cast Iron Porcelain Coated
Infrared Back Burner	✗
Cast Stainless Steel Side Burner	Optional #60010CE Side Burner
Piezo Igniter	✓
Zinc Knobs	✓
SS 304 Gauge	2 mm
SS Dual Lined Hood	✓
Solid SS Grates	✓
Heavy Duty Thermometer	✓
Solid SS Warming Rack	✓
Rotisserie Kit	✗
SS Grease Tray	✓
SS Side Shelves	✓
Twin Lighting System	✗
SS 304 Double Door Cart	✓
SS 304 Door/Drawer Cart	✗
Heavy Duty Castors	✓
CSA Certified	✓
CE Certified	✓
Lower Cooking Surface	97 x 49 cm
Upper Cooking Surface	97 x 18 cm
Warranty Details	
Fire Box/Roasting Hood	Lifetime
Cooking Grates	Lifetime
Burners	2 Years
Flame Tamers	5 Years
Grill Packing Dimensions	
Grill Carton Length	107 cm
Grill Carton Width	66 cm
Grill Carton Height	62 cm
Grill Carton Cube	0.44 M^3
Grill Carton Weight	74.00 Kg
Cart Packing Dimensions	
Cart Carton Length	103 cm
Cart Carton Width	58 cm
Cart Carton Height	53 cm
Cart Carton Cube	0.32 M^3
Cart Carton Weight	37.65 Kg

RENEGADE CART

RENEGADE BUILT-IN

The 100cm Renegade Grill is a 5 burner 22 kHw stainless steel Grill Cart. This cart has plenty of room for grilling and plenty of storage under the grill for your propane tank and tools. It can also be easily moved to the ideal location in your backyard or patio.

CAST STAINLESS STEEL BURNER
NEW BAFFLE SYSTEM

This Burner is the heart of our Premium Series Grills. It is made from 304 Grade Cast Stainless Steel. This heavy duty technology goes up to 4.4kWh.

Our Bar Burners use a Graduated Output System, with larger ports in the front and smaller ones towards the back. This keeps the temperature consistent by forcing more heat towards the front of the grill to match the heat at the back of the grill.

Inside the Bar Burners lies a Proprietary Baffle System that allows for greater gas flow control and balances the heat output along the entire grilling surface.

Our ReliaBull Technology is engineered by the finest University experts in California. This is why Bull is confident in offering a LIFETIME WARRANTY on these Beasts!

KNOW BULL.
LIFETIME
WARRANTY
PLEASE REFER TO WARRANTY DOCUMENT

PREMIUM SERIES

Standard Features	
Angus Cart	#44000CE-LPG
	#44001CE-NG
Angus Built-In	#47628CE-LPG
	#47629CE-NG
Cooking Power-kWh	22 kWh
Burners	4-Cast S/ Steel Bar Burners
Infrared Back Burner	✓
Cast Stainless Steel Side Burner	Optional #60010CE Side Burner
Piezo Igniter	✓
Zinc Knobs	✓
SS 304 Gauge	2 mm
SS Dual Lined Hood	✓
Solid SS Grates	✓
Heavy Duty Thermometer	✓
Solid SS Warming Rack	✓
Rotisserie Kit	✓
SS Grease Tray	✓
SS Side Shelves	✓
Twin Lighting System	✓
SS 304 Double Door Cart	✓
SS 304 Door/Drawer Cart	✗
Heavy Duty Castors	✓
CSA Certified	✓
CE Certified	✓
Lower Cooking Surface	76 x 49 cm
Upper Cooking Surface	76 x 18 cm
Warranty Details	
Fire Box/Roasting Hood	Lifetime
Cooking Grates	Lifetime
Burners	Lifetime
Flame Tamers	5 Years
Grill Packing Dimensions	
Grill Carton Length	88 cm
Grill Carton Width	66 cm
Grill Carton Height	63 cm
Grill Carton Cube	0.37 M^3
Grill Carton Weight	71.00 Kg
Cart Packing Dimensions	
Cart Carton Length	84 cm
Cart Carton Width	58 cm
Cart Carton Height	53 cm
Cart Carton Cube	0.26 M^3
Cart Carton Weight	33.50 Kg

ANGUS CART

ANGUS BUILT-IN

The Angus Grill is a 80cm 4-Burner Stainless Steel Barbecue Grill with an Infrared Back Burner and rotisserie. This grill cart has room to prepare food and great storage for your tools and propane tank.

Standard Features	
Brahma Cart	#55000CE-LPG
	#55001CE-NG
Brahma Built-In	#57568CE-LPG
	#57569CE-NG
Cooking Power	26.4 kWh
Burners	5 - Cast S/Steel Bar Burners
Infrared Back Burner	✓
Cast Stainless Steel Side Burner	Optional #60010CE Side Burner
Piezo Igniter	✓
Zinc Knobs	✓
SS 304 Gauge	2 mm
SS Dual Lined Hood	✓
Solid SS Grates	✓
Heavy Duty Thermometer	✓
Solid SS Warming Rack	✓
Rotisserie Kit	✓
SS Grease Tray	✓
SS Side Shelves	✓
Twin Lighting System	✓
SS 304 Double Door Cart	✓
SS 304 Door/Drawer Cart	✗
Heavy Duty Castors	✓
CSA Certified	✓
CE Certified	✓
Lower Cooking Surface	97 x 49 cm
Upper Cooking Surface	97 x 18 cm
Warranty Details	
Fire Box/Roasting Hood	Lifetime
Cooking Grates	Lifetime
Burners	Lifetime
Flame Tamers	5 Years
Grill Packing Dimensions	
Grill Carton Length	107 cm
Grill Carton Width	66 cm
Grill Carton Height	62 cm
Grill Carton Cube	0.44 M^3
Grill Carton Weight	84.00 Kg
Cart Packing Dimensions	
Cart Carton Length	103 cm
Cart Carton Width	58 cm
Cart Carton Height	53 cm
Cart Carton Cube	0.32 M^3
Cart Carton Weight	35.38 Kg

BRAHMA CART

BRAHMA BUILT-IN

The Brahma Grill is a 100cm 5-Burner stainless steel gas barbecue with an infrared back burner and rotisserie. This cart has plenty of room for grilling and plenty of storage under the grill for your propane tank and tools.

PREMIUM SERIES

Standard Features	
Diablo Cart	#62600CE-LPG
	#62601CE-NG
Requires #62725CE Cart Conversion Kit	
Diablo Built-In	#62648CE-LPG
	#62649CE-NG
Cooking Power	30.8 kWh
Burners	6 - Cast S/Steel Bar Burners
Infrared Back Burner	✓
Cast Stainless Steel Side Burner	✗
Piezo Igniter	✓
Zinc Knobs	✓
SS 304 Gauge	2 mm
SS Dual Lined Hood	✓
Solid SS Grates	✓
Heavy Duty Thermometer	✓
Solid SS Warming Rack	✓
Rotisserie Kit	✓
SS Grease Tray	✓
SS Side Shelves	✓
Twin Lighting System	✓
SS 304 Double Door Cart	✗
SS 304 Door/Drawer Cart	✓
Heavy Duty Castors	✓
CSA Certified	✓
CE Certified	✓
Lower Cooking Surface	115x 49 cm
Upper Cooking Surface	115x 18 cm
Warranty Details	
Fire Box/Roasting Hood	Lifetime
Cooking Grates	Lifetime
Burners	Lifetime
Flame Tamers	5 Years
Grill Packing Dimensions	
Grill Carton Length	127 cm
Grill Carton Width	66 cm
Grill Carton Height	62 cm
Grill Carton Cube	0.52M^3
Grill Carton Weight	98.00 Kg
Cart Packing Dimensions	
Cart Carton Length	127 cm
Cart Carton Width	62 cm
Cart Carton Height	63 cm
Cart Carton Cube	0.50 M^3
Cart Carton Weight	55.00 Kg

DIABLO CART

DIABLO BUILT-IN

The Diablo grill is a 6-Burner 117cm barbecue grill with an Infrared back burner and rotisserie. Our largest Grill boasts a whopping 30.8 kWh of cooking power and comes standard with our Reliabull heat technology that reduces hot and cold spots creating a more even grilling surface.

Standard Features	
7 Burner Cart	#28368CE-LPG
	#28369CE-NG
7 Burner Built-In	#18248CE-LPG
	#18249CE-NG
Cooking Power	30.8 kWh
Burners	4 - Cast S/Steel Bar Burners
Infrared Back Burner	✓
Cast Stainless Steel Side Burner	✓
Piezo Igniter	✓
Zinc Knobs	✓
SS 304 Gauge	2 mm
SS Dual Lined Hood	✓
Solid SS Grates	✓
Heavy Duty Thermometer	✓
Solid SS Warming Rack	✓
Rotisserie Kit	✓
SS Grease Tray	✓
SS Side Shelves	✓
Twin Lighting System	✓
SS 304 Double Door Cart	✗
SS 304 Door/Drawer Cart	✓
Heavy Duty Castors	✓
CSA Certified	✓
CE Certified	✓
Lower Cooking Surface	76 x 49 cm
Upper Cooking Surface	76 x 18 cm
Warranty Details	
Fire Box/Roasting Hood	Lifetime
Cooking Grates	Lifetime
Burners	Lifetime
Flame Tamers	5 Years
Grill Packing Dimensions	
Grill Carton Length	125 cm
Grill Carton Width	70 cm
Grill Carton Height	60 cm
Grill Carton Cube	0.53 M^3
Grill Carton Weight	91.00 Kg
Cart Packing Dimensions	
Cart Carton Length	127 cm
Cart Carton Width	62 cm
Cart Carton Height	63 cm
Cart Carton Cube	0.50 M^3
Cart Carton Weight	55.00 Kg

7 BURNER CART

7 BURNER BUILT-IN

The 7 Burner Grill is the largest and most versatile of all our carts. It has an impressive cooking area, with infrared Back Burner and rotisserie, along with extra storage space. The incorporated double side burner saves space especially when incorporating in an Outdoor Kitchen.

Sidekick Cart Side Burner	#60010CE	LPG
	On request	NG
304 Solid Cast Stainless Steel Burner. Piezo Ignition.		
304 Solid Stainless Steel Grate. GAS CONNECTION KIT NOT INCLUDED.		
Replaces right shelf on 61,76 & 97cm Bull Grill Carts.		
Specifications		
CE Certified	4.40 kWh	

Dimensions			Cut out Dimensions		
L 33.2 cm	D 47.7 cm	H 15.3 cm	L N/A	D N/A	H N/A

CTN Length	0.54 Mts	CTN Height	0.21 Mts	
CTN Width	0.40 Mts	CTN Weight	8 Kg	1 Pcs

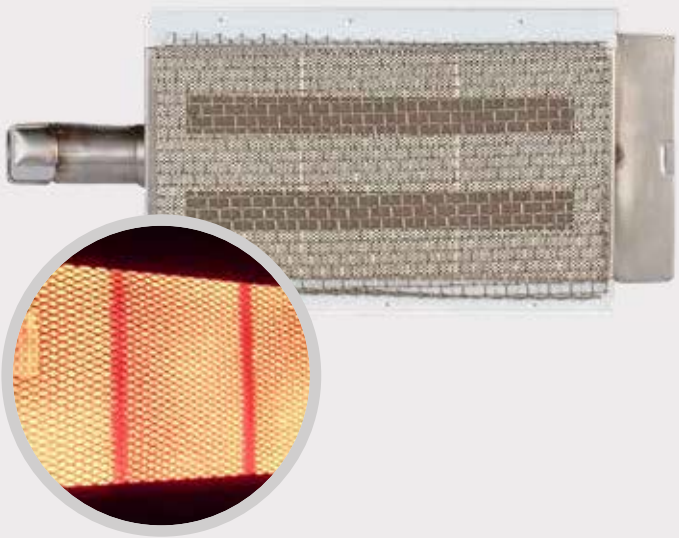

Infrared Searing Burner	#20505CE	LPG / NG
Ceramic Infrared sear Burner 5.86 kWh.		
Replaces the rightmost burner on all Bull Grills. Takes less than one minute to install.		
Sear your Favourite Maet to Perfection.		
Specifications		
CE Certified	5.86 kWh	

Dimensions			Cut out Dimensions		
L 16.8 cm	D 40.8 cm	H 7.1 cm	L N/A	D N/A	H N/A

CTN Length	0.48 Mts	CTN Height	0.20 Mts	
CTN Width	0.46 Mts	CTN Weight	11.5 Kg	5 Pcs

Volcanic Rock Lava Stone	#97030
Replaces 2 cooking grids on 76, 97 &120cm Grills. USE ONLY ONE PER GRILL.	
Grease gutter around perimeter and Grease hole.	
Use as a Griddle for Fry Ups. Bake Pizza or Focaccia.	
Specifications	
20mm thick	

Dimensions			Cut out Dimensions		
L 49.5cm	D 38.5cm	H 2.0cm	L N/A	D N/A	H N/A

CTN Length	0.53 Mts	CTN Height	0.09 Mts	
CTN Width	0.43 Mts	CTN Weight	10.5 Kg	1 Pcs

EASY FILL SMOKER BOX

The Smoker Box provides you with the simple means to impart a delicate layer of smoke to a variety of grilled foods prepared on a BBQ Grill. Specifically designed to fit in between the burners of the Bull Grill, the Easy Fill Smoker Box features a sliding lid that makes adding more wood chips exceptional-ly straightforward. Additionally, the Smoker Box can be filled with flavoured water or any other liquid to add moisture to your favourite grilled foods. Constructed of high-quality 304 stainless steel, the Easy Fill Smoker Box is built to endure through many BBQ seasons.

Easy Fill Smoker Box			#75000CE		
304 Stainless Steel Construction & Easy Fill Sliding Top					
Fits Full Length Bertween Burners. Works in all Bull Grills					
Specifications					
CE Certified					
Dimensions					
L 10 cm	D 30 cm	H 6 cm			
CTN Length	0.35 Mts	CTN Height	0.10 Mts		
CTN Width	0.15 Mts	CTN Weight	0.95 Kg	1 Pcs	

Slide-In Removable Griddle					#97020
Turns part of your Bull Grill into a Flat Top Griddle .					
Perfect for making Tacos, Pancakes, Eggs and so much more.					
Replaces 2 cooking grids on 76, 97 &120cm Grills. USE ONLY ONE PER GRILL.					
Specifications					
Solid S/Steel					
Dimensions			Cut out Dimensions		
L 50.00cm	D 38.0cm	H 2.0cm	L N/A	D N/A	H N/A
CTN Length	0.52 Mts		CTN Height	0.05 Mts	
CTN Width	0.40 Mts		CTN Weight	8.5 Kg	1 Pcs

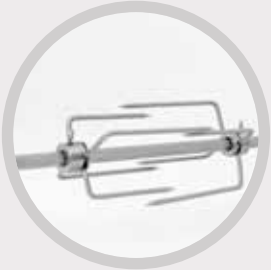

Rotisserie Kit for Steer				#66000CE
Fits Steer Grill. Rotisserie Rod Length: 78cm				
Includes Rotisserie Motor, rod, forks, counter weight, bracket, shaft collar and handle.				
Available for our Entry Level Grills				
CTN Length	0.90 Mts	CTN Height	0.11 Mts	
CTN Width	0.12 Mts	CTN Weight	5 Kg	1 Pcs

Rotisserie Kit for 80 cm Grills				#46000CE
Fits Angus, Outlaw, Lonestar and 7-Burner Grills. Rotisserie Rod Length: 91cm				
Includes Rotisserie Motor, rod, forks, counter weight, bracket, shaft collar and handle.				
Available for our Entry Level Grills.				
CTN Length	0.96 Mts	CTN Height	0.11 Mts	
CTN Width	0.12 Mts	CTN Weight	5 Kg	1 Pcs

Rotisserie Kit for 100 cm Grills				#56000CE
Fits Brahma and Renegade Grills. Rotisserie Rod Length: 110cm				
Includes Rotisserie Motor, rod, forks, counter weight, bracket, shaft collar and handle.				
Available for our Entry Level Grills.				
CTN Length	1.15 Mts	CTN Height	0.11 Mts	
CTN Width	0.12 Mts	CTN Weight	5 Kg	1 Pcs

A wide selection of Covers available for all Grill Heads and Carts

Bull 60cm Cart Cover			# 72010	
300D Polyester Black Red Piping & Stitched Logo.				
This Head cover fits Bull Steer Cart.				
CTN Length	0.25 Mts	CTN Height	0.3 Mts	
CTN Width	0.12 Mts	CTN Weight	2 Kg	1 Pcs

Bull 80cm Cart Cover			# 72012	
300D Polyester Black Red Piping & Stitched Logo.				
This Head cover fits Bull Angus, Outlaw and Lonestar Carts.				
CTN Length	0.25 Mts	CTN Height	0.3 Mts	
CTN Width	0.12 Mts	CTN Weight	2 Kg	1 Pcs

Bull 100cm Cart Cover			# 72013	
300D Polyester Black Red Piping & Stitched Logo.				
This Head cover fits Bull Renegade and Brahma Carts.				
CTN Length	0.33 Mts	CTN Height	0.20 Mts	
CTN Width	0.29 Mts	CTN Weight	2 Kg	1 Pcs

Bull 120cm Cart Cover			# 72014	
300D Polyester Black Red Piping & Stitched Logo.				
This Head cover fits Bull 7-Burner Cart.				
CTN Length	0.25 Mts	CTN Height	0.3 Mts	
CTN Width	0.12 Mts	CTN Weight	2 Kg	1 Pcs

Bull 60cm Griddle Head Cover			# 97770	
300D Polyester Black Red Piping & Stitched Logo.				
This Head cover fits Bull Plancha Griddle Built-In.				
CTN Length	0.25 Mts	CTN Height	0.3 Mts	
CTN Width	0.12 Mts	CTN Weight	0.5 Kg	1 Pcs

Bull 60cm Grill Head Cover			# 72016	
300D Polyester Black Red Piping & Stitched Logo.				
This Head cover fits Bull Steer Built-In.				
CTN Length	0.25 Mts	CTN Height	0.3 Mts	
CTN Width	0.12 Mts	CTN Weight	0.5 Kg	1 Pcs

Bull 80cm Grill Head Cover			# 45005	
300D Polyester Black Red Piping & Stitched Logo.				
This Head cover fits Bull Angus, Outlaw and Lonestar Built-In.				
CTN Length	0.25 Mts	CTN Height	0.3 Mts	
CTN Width	0.12 Mts	CTN Weight	0.5 Kg	1 Pcs

Bull 80cm Grill Head Cover			# 72018	
300D Polyester Black Red Piping & Stitched Logo.				
This Head cover fits Bull Bison Built-In.				
CTN Length	0.25 Mts	CTN Height	0.3 Mts	
CTN Width	0.12 Mts	CTN Weight	0.5 Kg	1 Pcs

Bull 100 cm Grill Head Cover			# 56006	
300D Polyester Black Red Piping & Stitched Logo.				
This Head cover fits Bull Renegade and Brahma Built-In.				
CTN Length	0.25 Mts	CTN Height	0.3 Mts	
CTN Width	0.12 Mts	CTN Weight	0.5 Kg	1 Pcs

Bull 120cm Grill Head Cover			# 72017	
300D Polyester Black Red Piping & Stitched Logo.				
This Head cover fits Bull Diablo Built-In.				
CTN Length	0.25 Mts	CTN Height	0.3 Mts	
CTN Width	0.12 Mts	CTN Weight	0.5 Kg	1 Pcs

Bull 120cm Grill Head Cover			# 72015	
300D Polyester Black Red Piping & Stitched Logo.				
This Head cover fits Bull 7-Burner Built-In.				
CTN Length	0.25 Mts	CTN Height	0.3 Mts	
CTN Width	0.12 Mts	CTN Weight	0.5 Kg	1 Pcs

All Covers are also available in Sunbrella Surlast Canvas.

Bull 60cm Griddle Cart Cover		# SLC73008		
This Cover fits Bull Plancha Griddle Cart.				
Subrella Surlast, a 100% solution-dyed all weather polyester.				
CTN Length	0.31 Mts	CTN Height	0.4 Mts	
CTN Width	0.12 Mts	CTN Weight	1.5 Kg	1 Pcs

Bull 60cm Cart Cover		# SLC69105		
This Cart Cover fits Bull Steer Cart.				
Subrella Surlast, a 100% solution-dyed all weather polyester.				
CTN Length	0.31 Mts	CTN Height	0.4 Mts	
CTN Width	0.12 Mts	CTN Weight	1.5 Kg	1 Pcs

Bull 80cm Cart Cover		# SLC74033		
This Cart Cover fits Bull Outlaw, Lonestar & Angus Cart.				
Subrella Surlast, a 100% solution-dyed all weather polyester.				
CTN Length	0.31 Mts	CTN Height	0.4 Mts	
CTN Width	0.12 Mts	CTN Weight	1.5 Kg	1 Pcs

Bull 100cm Cart Cover		# SLC55100		
This Cart Cover fits Bull Renegade, Brahma Cart.				
Subrella Surlast, a 100% solution-dyed all weather polyester.				
CTN Length	0.31 Mts	CTN Height	0.4 Mts	
CTN Width	0.12 Mts	CTN Weight	1.5 Kg	1 Pcs

Bull 120cm Grill Cart Cover		# SLC62600		
This Cart Cover fits Bull Diablo Cart.				
Subrella Surlast, a 100% solution-dyed all weather polyester.				
CTN Length	0.31 Mts	CTN Height	0.4 Mts	
CTN Width	0.12 Mts	CTN Weight	2 Kg	1 Pcs

Bull 120cm Cart Cover		# SLC18035		
This Cart Cover fits Bull 7 Burner Cart.				
Subrella Surlast, a 100% solution-dyed all weather polyester.				
CTN Length	0.31 Mts	CTN Height	0.4 Mts	
CTN Width	0.12 Mts	CTN Weight	2 Kg	1 Pcs

Bull 80cm Cart Cover		# SLC88000		
This Cart Cover fits Bull Bison Cart.				
Subrella Surlast, a 100% solution-dyed all weather polyester.				
CTN Length	0.31 Mts	CTN Height	0.4 Mts	
CTN Width	0.12 Mts	CTN Weight	1.5 Kg	1 Pcs

Colour Options

Bull 60cm Griddle Head Cover		# SLC97770		
This Head Cover fits Bull Plancha Griddle Built-In.				
Subrella Surlast, a 100% solution-dyed all weather polyester.				
CTN Length	0.21 Mts	CTN Height	0.32 Mts	
CTN Width	0.07 Mts	CTN Weight	0.5 Kg	1 Pcs

Bull 60cm Grill Head Cover		# SLC69010		
This Head cover fits Bull Steer Premium Built-In.				
Subrella Surlast, a 100% solution-dyed all weather polyester.				
CTN Length	0.21 Mts	CTN Height	0.32 Mts	
CTN Width	0.07 Mts	CTN Weight	0.5 Kg	1 Pcs

Bull 80cm Grill Head Cover		# SLC42030		
This Head cover fits Bull Outlaw, Lonestar & Angus Built-In.				
Subrella Surlast, a 100% solution-dyed all weather polyester.				
CTN Length	0.21 Mts	CTN Height	0.32 Mts	
CTN Width	0.07 Mts	CTN Weight	0.5 Kg	1 Pcs

Bull 100cm Grill Head Cover		# SLC56006		
This Head cover fits Bull Renegade, Brahma Built-In.				
Subrella Surlast, a 100% solution-dyed all weather polyester.				
CTN Length	0.21 Mts	CTN Height	0.32 Mts	
CTN Width	0.07 Mts	CTN Weight	0.5 Kg	1 Pcs

Bull 120cm Grill Head Cover		# SLC66270		
This Head cover fits Bull Diablo Built-In.				
Subrella Surlast, a 100% solution-dyed all weather polyester.				
CTN Length	0.21 Mts	CTN Height	0.32 Mts	
CTN Width	0.07 Mts	CTN Weight	0.5 Kg	1 Pcs

Bull 120cm Grill Head Cover		# SLC70000		
This Head Cover fits Bull 7- Burner Built-In.				
Subrella Surlast, a 100% solution-dyed all weather polyester.				
CTN Length	0.21 Mts	CTN Height	0.32 Mts	
CTN Width	0.07 Mts	CTN Weight	0.5 Kg	1 Pcs

Bull 80cm Grill Head Cover		# SLC88787		
This Head Cover fits Bull Bison Built-In.				
Subrella Surlast, a 100% solution-dyed all weather polyester.				
CTN Length	0.21 Mts	CTN Height	0.32 Mts	
CTN Width	0.07 Mts	CTN Weight	0.5 Kg	1 Pcs

These are Premium Hand Stitched Tailored Covers in Sunbrella Surlast Marine Grade Fabric & Thread.

BULL

WOOD FIRED LARGE

The Large Pizza Oven is wood-fired and built in Italy made entirely from Grade 304 Stainless Steel and reinforced with 6mm corten refractory plates.

Large Pizza Oven with Cart			#66025		
Baking Stone: 60 cm W x 60 cm D.					
Internal Top 2.55mm. Internal Bottom 3.00mm thick.					
Made entirely from SS 304.					
Specifications					
Powder Coated Anthracite Top.					
Dimensions					
L 77.8 cm	D 85.5 cm	H 198 cm			
CTN Length	0.89 Mts		CTN Height	0.83 Mts	
CTN Width	0.83 Mts		CTN Weight	130 Kg	1 Pcs

Large Pizza Oven			#66024		
Baking Stone: 60 cm W x 60 cm D.					
Internal Top 2.55mm. Internal Bottom 3.00mm thick.					
Made entirely from SS 304.					
Specifications					
Powder Coated Anthracite Top.					
Dimensions					
L 77.8 cm	D 85.5 cm	H 118 cm			
CTN Length	0.89 Mts		CTN Height	0.63 Mts	
CTN Width	0.83 Mts		CTN Weight	108 Kg	1 Pcs

Large Cart Bottom Only			#66239		
304 Stainless Steel.					
Unassembled.					
Dimensions					
L 77.8 cm	D 78 cm	H 79.8 cm			
CTN Length	0.89 Mts		CTN Height	0.22 Mts	
CTN Width	0.83 Mts		CTN Weight	22 Kg	1 Pcs

WOOD FIRED XL

The Extra Large Pizza Oven is wood-fired and built in Italy made entirely from Grade 304 Stainless Steel and reinforced with 6mm corten refractory plates. Adding a little more room for the busy pizzaiolo.

Extra Large Pizza Oven & Cart			#66042		
Baking Stone: 80 cm W x 60 cm D.					
Internal Top 2.55mm. Internal Bottom 3.00mm thick.					
Made entirely from SS 304.					
Specifications					
Powder Coated Anthracite Top.					
Dimensions					
L 98 cm	D 85.5 cm	H 198 cm			
CTN Length	1.03 Mts		CTN Height	0.85 Mts	
CTN Width	0.99 Mts		CTN Weight	152 Kg	1 Pcs

Extra Large Pizza Oven			#66040		
Baking Stone: 80 cm W x 60 cm D.					
Internal Top 2.55mm. Internal Bottom 3.00mm thick.					
Made entirely from SS 304.					
Specifications					
Powder Coated Anthracite Top.					
Dimensions					
L 98 cm	D 85.5 cm	H 119 cm			
CTN Length	1.03 Mts		CTN Height	0.63 Mts	
CTN Width	0.99 Mts		CTN Weight	130 Kg	1 Pcs

Extra Large Cart Bottom Only			#66241		
304 Stainless Steel.					
Unassembled.					
Dimensions					
L 98 cm	D 78 cm	H 79.8 cm			
CTN Length	0.93 Mts		CTN Height	0.22 Mts	
CTN Width	0.72 Mts		CTN Weight	22 Kg	1 Pcs

NEW HYBRID PIZZA OVENS

Meet our hybrid pizza ovens! They play nice with gas for quick and efficient cooking, but here's where the magic happens: the included conversion kit lets you switch to wood-fired goodness. Feel the power surge as the oven heats up in record time, thanks to increased firepower. Plus, enjoy the culinary spotlight with the new left-sided burner, ensuring better cooking precision and hassle-free maintenance.

HYBRID LARGE

The New Hybrid Large Pizza Oven gives you the option to cook with wood or Gas! It is built in Italy made entirely from Grade 304 Stainless Steel. A much cleaner and faster way to cook your favourite pizza and roast.

Large Pizza Oven with Cart				#66125CE
Baking Stone: 60 cm W x 60 cm D.				
Internal Top 2.55mm. Internal Bottom 3.00mm thick.				
Made entirely from SS 304.				
Specifications				
Brushed stainless Steel Top. 16kWh S/Steel Tubular Burner.				
Dimensions				
L 77.8 cm	D 85.5 cm	H 198 cm		
CTN Length	0.89 Mts	CTN Height	0.93 Mts	
CTN Width	0.83 Mts	CTN Weight	130 Kg	1 Pcs

Large Pizza Oven				#66124CE
Baking Stone: 60 cm W x 60 cm D.				
Internal Top 2.55mm. Internal Bottom 3.00mm thick.				
Made entirely from SS 304.				
Specifications				
Brushed stainless Steel Top. 16kWh S/Steel Tubular Burner.				
Dimensions				
L 77.8 cm	D 85.5 cm	H 126 cm		
CTN Length	0.89 Mts	CTN Height	0.71 Mts	
CTN Width	0.83 Mts	CTN Weight	110 Kg	1 Pcs

Large Cart Bottom Only				#66239
304 Stainless Steel.				
Unassembled.				
Dimensions				
L 77.8 cm	D 78 cm	H 71.8 cm		
CTN Length	0.93 Mts	CTN Height	0.22 Mts	
CTN Width	0.73 Mts	CTN Weight	20 Kg	1 Pcs

HYBRID XL

The New Hybrid XL Pizza Oven gives you the option to cook with wood or Gas!built in Italy made entirely from Grade 304 Stainless Steel. A much cleaner and faster way to cook your favourite pizza and roast, with a little extra room. More Pizza, Less Time!

Extra Large Pizza Oven & Cart			#66142CE		
Baking Stone: 80 cm W x 60 cm D.					
Internal Top 2.55mm.Internal Bottom 3.00mm thick.					
Made entirely from SS 304.					
Specifications					
Brushed stainless Steel Top. 20kWh S/Steel Tubular Burner.					
Dimensions					
L 97.8 cm	D 85.5 cm	H 198 cm			
CTN Length	1.03 Mts		CTN Height	0.93 Mts	
CTN Width	0.89 Mts		CTN Weight	147 Kg	1 Pcs

Extra Large Pizza Oven			#66140CE		
Baking Stone: 80 cm W x 60 cm D. Chimney Stainless steel 304.					
Internal Top 2.55mm.Internal Bottom 3.00mm thick.					
Made entirely from SS 304					
Specifications					
Brushed stainless Steel Top. 20kWh S/Steel Tubular Burner.					
Dimensions					
L 97.8 cm	D 85.5 cm	H 126 cm			
CTN Length	1.03 Mts		CTN Height	0.71 Mts	
CTN Width	0.89 Mts		CTN Weight	127 Kg	1 Pcs

Extra Large Cart Bottom Only			#66241		
304 Stainless Steel.					
Unassembled.					
Dimensions					
L 98.0 cm	D 78 cm	H 71.8 cm			
CTN Length	0.93 Mts		CTN Height	0.22 Mts	
CTN Width	0.73 Mts		CTN Weight	20 Kg	1 Pcs

SURLAST COVERS

Large Pizza Oven Cover			#SLC66024	
Fits Large Oven #66024/#66124.				
Weather Proof and Breathable Sumbrella Surlast Cover.				
CTN Length	0.43 Mts	CTN Height	0.31 Mts	
CTN Width	0.08 Mts	CTN Weight	1 Kg	1 Pcs

XL Pizza Oven Cover			#SLC66040	
Fits Extra Large Oven #66040/#66140.				
Weather Proof and Breathable Sumbrella Surlast Cover.				
CTN Length	0.43 Mts	CTN Height	0.31 Mts	
CTN Width	0.08 Mts	CTN Weight	1 Kg	1 Pcs

Large Pizza Oven Cart Cover			#SLC66025	
Fits Large Oven #66025/#66125.				
Weather Proof and Breathable Sumbrella Surlast Cover.				
CTN Length	0.35 Mts	CTN Height	0.4 Mts	
CTN Width	0.06 Mts	CTN Weight	2 Kg	1 Pcs

XL Pizza Oven Cart Cover			#SLC66042	
Fits Large Oven #66042/#66142.				
Weather Proof and Breathable Sumbrella Surlast Cover.				
CTN Length	0.40 Mts	CTN Height	0.8 cm Mts	
CTN Width	0.30 Mts	CTN Weight	2 Kg	1 Pcs

COMPONENTS

SEARING STATION

NOW CE CERTIFIED!

You can't properly finish a steak without serious heat. The Bull Searing Station provides just that heat, locking in flavors and providing the beautiful caramelization that raises your outdoor cooking to the next level.

Slide-in Searing Station			#94008CE	LPG
			#94009CE	NG
304 Stainless Steel Construction & Removable Cover.				
Solid Cast S/Steel Burners/Piezo Igniter . GAS CONNECTIONS NOT INCLUDED.				
Sear to perfection with this MASSIVE 7.3 kWh ceramic burner.				
Specifications				
CE Certified	7.3 kWh			Slide-in Design
Dimensions			Cut out Dimensions	
L 33.7 cm	D 63.1 cm	H 24.1 cm	L 30.5 cm	D 53 cm	H 24 cm
CTN Length	0.67 Mts		CTN Height	0.28 Mts	
CTN Width	0.36 Mts		CTN Weight	17.8 Kg	1 Pcs

SIDE BURNERS

Drop-in Single Side Burner			#60008CE	LPG
			#60009CE	NG
304 Solid Cast Stainless Steel Burner. Piezo Ignition.				
304 Solid Stainless Steel Grate. GAS CONNECTIONS NOT INCLUDED.				
Drop a Side Burner in your Outdoor Kitchen Top. Also fits on a Fridge.				
Specifications				
CE Certified	4.4 kWh		Drop-in Design	
Dimensions		Cut out Dimensions		
L 31.8 cm	D 54.7 cm	H 14.5 cm	L 28.8 cm	D 44.5 cm	H 8.5 cm
CTN Length	0.58 Mts	CTN Height	0.20 Mts	
CTN Width	0.34 Mts	CTN Weight	8.6 Kg	1 Pcs

Slide - In Double Side Burner			#30008CE	LPG
			#30009CE	NG
304 Stainless Steel Construction & Removable Cover.				
Solid Cast S/Steel Burners/Piezo Igniter. GAS CONNECTIONS NOT INCLUDED.				
Transform your Outdoor Kitchen to a Complete Cooking Station.				
Specifications				
CE Certified	7 kWh	13.15Kg	Slide-in Design	
Dimensions		Cut out Dimensions		
L 33.5 cm	D 62.3 cm	H 24.4 cm	L 30.5 cm	D 52.8 cm	H 24 cm
CTN Length	0.69 Mts	CTN Height	0.29 Mts	
CTN Width	0.37 Mts	CTN Weight	15 Kg	1 Pcs

Single Slide-in Pro Side Burner			#60018CE	LPG
			#60019CE	NG
304 Stainless Steel Construction & Removable Cover.				
Solid Cast S/Steel Burners/Piezo Igniter . GAS CONNECTIONS NOT INCLUDED.				
Transform your Outdoor Kitchen to a Complete Cooking Station.				
Specifications				
CE Certified	7 kWh	13.15Kg	Slide-in Design	
Dimensions		Cut out Dimensions		
L 33.5 cm	D 41.2 cm	H 24 cm	L 30.5 cm	D 52.8 cm	H 24 cm
CTN Length	0.46 Mts	CTN Height	0.32 Mts	
CTN Width	0.36 Mts	CTN Weight	9.5 Kg	1 Pcs

REFRIGERATORS

Standard Fridge			#11002CE		
The fridge is roomy with 130Lts of space.					
Space saving flush back design door panel. Reversible door - left or right swing.					
Add a Fridge to your Outdoor Kitchen.					
Specifications					
CE Certified	SS 304 Door		R600A	75w; 0.65A	
Dimensions			Cut out Dimensions		
L 48.9 cm	D 45.9 cm	H 81.0 cm	L 52.2 cm	D 46.8 cm	H 83.0 cm
CTN Length	0.55 Mts		CTN Height	0.85 Mts	
CTN Width	0.57 Mts		CTN Weight	30 Kg	1 Pcs

Premium Outdoor Rated Fridge			#13700CE		
UV-Safe, IPX4 rated Rainproof and Internal Digital LED Control Panel.					
LED Control Panels, Reversible self-Closing and sealed locking Door.					
Withstands extremes of weather, direct sunlight and high humidity.					
Specifications					
CE Certified	Grade 304 SS		R600a	110w; 1.0A	
Dimensions			Cut out Dimensions		
L 60.1 cm	D 60.1 cm	H 82.6 cm	L 62.0 cm	D 56.5 cm	H 84.0 cm
CTN Length	0.65 Mts		CTN Height	0.88 Mts	
CTN Width	0.65 Mts		CTN Weight	50 Kg	1 Pcs

Kegorator			#17900CE		
UV-Safe, IPX4 rated Rainproof and Internal Digital LED Control Panel.					
Front venting internal and external fans.					
When the Beer is Never Enough.					
Specifications					
CE Certified	Grade 304 SS		R600a	125w; 1.10A	
Dimensions			Cut out Dimensions		
L 60.5 cm	D 63.8 cm	H 87.1 cm	L 63.0 cm	D 61.5 cm	H 88.5cm
CTN Length	0.67 Mts		CTN Height	0.93 Mts	
CTN Width	0.72 Mts		CTN Weight	58 Kg	1 Pcs

REFRIGERATORS

Premium Double Drawer Outdoor Rated Fridge			#17400CE		
UV-Safe, IPX4 rated Rainproof and Internal Digital LED Control Panel.					
Withstands extremes of weather, direct sunlight and high humidity. Front venting.					
Another Practical way to Store your Cold Beverages.					
Specifications					
CE Certified	Grade 304 SS		R600a		
Dimensions			Cut out Dimensions		
L 59.3 cm	D 53 cm	H 82 cm	L 62.5 cm	D 54 cm	H 84 cm
CTN Length	0.63 Mts		CTN Height	0.87 Mts	
CTN Width	0.64 Mts		CTN Weight	30 Kg	1 Pcs

Premium Glass Fridge			#13100CE		
Fridge capacity: 145L, Climate class: N, Protection class: I					
Internal Digital LED Control Panel, Self-closing, Sealed Locking Door. Front venting					
For Showing off your Favourite Wines.					
Specifications					
CE Certified	Grade 304 SS		R600a	Glass Door	
Dimensions			Cut out Dimensions		
L 59.5 cm	D 57.5 cm	H 82 cm	L 62.5 cm	D 56.5 cm	H 84.0 cm
CTN Length	0.63 Mts		CTN Height	0.87 Mts	
CTN Width	0.64 Mts		CTN Weight	45 Kg	1 Pcs

ICE CHEST

Stainless Steel Ice Chest			#00002		
20Kgs capacity, Stainless Steel Construction.					
Double Walled, Includes Condiment Tray.					
Perfect for Chilling Drinks for your Outdoor entertainment.					
Specifications					
Stainless Steel	304 Grade				
Dimensions			Cut out Dimensions		
L 42.5 cm	D 51.3 cm	H 48.8 cm	L 35.0 cm	D 52.2 cm	H 39.5 cm
CTN Length	0.48 Mts		CTN Height	0.47 Mts	
CTN Width	0.58 Mts		CTN Weight	20 Kg	1 Pcs

BAR CENTERS

If you are just crazy about cocktails

76cm Bar Caddy					#97623
Sink with Cold Water Faucet and Cutting Board. Towel Holder and Bottle Opener.					
Ice Chest with sliding Lid, Removable Condiment Tray. 15kg ice capacity.					
Specifications					
Stainless Steel	304 Grade				
Dimensions			Cut out Dimensions		
L 72.9 cm	D 71.7 cm	H 32 cm	L 73.8 cm	D 57.8 cm	H 24 cm
CTN Length	0.84 Mts		CTN Height	0.35 Mts	
CTN Width	0.73 Mts		CTN Weight	33 Kg	1 Pcs

46cm Bar Caddy					#85624
Removable Condiment Tray.					
Ice Chest with sliding Lid. Towel Holder. 15kg ice capacity.					
Add a Cocktail Station to your Outdoor Kitchen.					
Specifications					
Stainless Steel	304 Grade				
Dimensions			Cut out Dimensions		
L 42.7 cm	D 56.7 cm	H 27.4 cm	L 43.5 cm	D 57 cm	H 24 cm
CTN Length	0.72 Mts		CTN Height	0.35 Mts	
CTN Width	0.52 Mts		CTN Weight	23 Kg	1 Pcs

BOTTLE OPENER

A stylish tool beside your fridge

Bottle Opener					#66006
1.7mm Gauge Stainless Steel Construction.					
Detachable Cap catch. Easy Mounting Design.					
Specifications					
Stainless Steel	304 Grade				
Dimensions			**Cut out Dimensions**		
L 15.2 cm	D N/A cm	H 25.4 cm	L N/A cm	D N/A cm	H N/A cm
CTN Length	0.69 Mts		CTN Height	0.19 Mts	
CTN Width	0.29 Mts		CTN Weight	11 Kg	12 Pcs

SINKS

A European Style Sink Range, now entirely in SS316

Stainless Steel Sink: Small			#22389		
1.2mm 316 Grade Stainless Steel.					
Hot and Cold Single Lever Water Faucet.					
Overflow with drain.					
Specifications					
Stainless Steel	316 Grade				
Dimensions			Cut out Dimensions		
L 37.8 cm	D 42.9 cm	H 19.9 cm	L 36 cm	D 41 cm	H 21.0 cm
CTN Length	0.44 Mts		CTN Height	0.35 Mts	
CTN Width	0.48 Mts		CTN Weight	8.00 Kg	1 Pcs

Stainless Steel Sink: Large			#22391		
1.2mm 316 Grade Stainless Steel.					
Hot and Cold Single Lever Water Faucet.					
Overflow with drain.					
Specifications					
Stainless Steel	316 Grade				
Dimensions			Cut out Dimensions		
L 48.3 cm	D 45 cm	H 20cm	L 46 cm	D 43.3 cm	H 21 cm
CTN Length	0.50 Mts		CTN Height	0.33 Mts	
CTN Width	0.55 Mts		CTN Weight	10 Kg	1 Pcs

Stainless Steel Sink: X-Large			#22392		
1.2mm 316 Grade Stainless Steel.					
Hot and Cold Single Lever Water Faucet.					
Overflow with drain.					
Specifications					
Stainless Steel	316 Grade				
Dimensions			Cut out Dimensions		
L 60 cm	D 49.5 cm	H 20 cm	L 57.8 cm	D 47.8 cm	H 21 cm
CTN Length	0.55 Mts		CTN Height	0.34 Mts	
CTN Width	0.65 Mts		CTN Weight	12 Kg	1 Pcs

MODERN REVEAL COMPONENT

As of 2025, all doors, drawers, combos and finishing frames will be avaialble with a new upgraded modern look. The reveal component design improves the strenght and durability of the components whilst providing a fresh modern look to your outdoor kitchen!

NO REVEAL

WITH REVEAL

DOORS

Utilise your kitchen structure for Storage

80cm Double Door			**#33568**		
80cm Double Door Reveal			**#33850**		
1.6mm Gauge Stainless Steel Construction.					
Double Walled. Internal liner #74000 not included.					
For Maximum Storage under your 4 Burner Grill.					
Specifications					
Stainless Steel	304 Grade				
Dimensions			Cut out Dimensions		
L 83.8 cm	D 4.9 cm	H 55.7 cm	L 79.0 cm	D 5.8 cm	H 50.5 cm
CTN Length	0.87 Mts		CTN Height	0.08 Mts	
CTN Width	0.59 Mts		CTN Weight	9 Kg	1 Pcs

100cm Double Door			**#34000**		
100cm Double Door Reveal			**#34020**		
1.6mm Gauge Stainless Steel Construction.					
Double Walled. Internal liner #74100 not included.					
For Massive Storage under your 5 Burner Grill.					
Specifications					
Stainless Steel	304 Grade				
Dimensions			Cut out Dimensions		
L 102.9 cm	D 4.9 cm	H 55.7 cm	L 98.0 cm	D 5.8 cm	H 50.5 cm
CTN Length	1.07 Mts		CTN Height	0.08 Mts	
CTN Width	0.59 Mts		CTN Weight	10.5 Kg	1 Pcs

Single Horizontal Door			**#89970**		
Single Horizontal Door Reveal			**#89990**		
1.6mm Gauge Stainless Steel Construction.					
Access Door with Lock & Key. Internal liner #89972 not included.					
Locking Access to your Outdoor Kitchen.					
Specifications					
Stainless Steel	304 Grade				
Dimensions			Cut out Dimensions		
L 64.9 cm	D 3.8 cm	H 46.0 cm	L 59.5cm	D 5.8 cm	H 39.5cm
CTN Length	0.68 Mts		CTN Height	0.08 Mts	
CTN Width	0.49 Mts		CTN Weight	5 Kg	1 Pcs

DOORS

Right Swing Vertical Door			**#89975**		
Left Swing Vertical Door			**#98552**		
Right Swing Vertical Door Reveal			**#89995**		
Left Swing Vertical Door Reveal			**#98560**		
1.6mm Gauge Stainless Steel Construction. Double Walled.					
Internal liner #89973 not included. Access Door for easy storage of propane/gas lines.					
Convenient to Access Services under your Sink.					
Specifications					
Stainless Steel	304 Grade				
Dimensions			Cut out Dimensions		
L 45.2 cm	D 4.9 cm	H 55.7 cm	L 40.0 cm	D 5.8 cm	H 49.5 cm
CTN Length	0.6 Mts		CTN Height	0.08 Mts	
CTN Width	0.48 Mts		CTN Weight	5 Kg	1 Pcs

VENTED DOORS

Allows for safe ventilation of your Outdoor Kitchen

Single Vented Door			**#89980**		
Single Vented Door Reveal			**#90000**		
304 Grade 1.6mm Gauge, Stainless Steel Construction, Double Walled					
Access Door for storage of propane tank or gas lines					
New Stylish Vented Doors to Store your Gas Bottle					
Specifications					
Stainless Steel	304 Grade				
Dimensions			Cut out Dimensions		
L 45.4 cm	D 4.8 cm	H 55.8 cm	L 40 cm	D 5.8 cm	H 50.5 cm
CTN Length	0.61 Mts		CTN Height	0.09 Mts	
CTN Width	0.38 Mts		CTN Weight	5 Kg	1 Pcs

80cm Vented Double Door			**#44570**		
80cm Vented Double Door Reveal			**#44580**		
304 Grade 1.6mm Gauge, Stainless Steel Construction, Double Walled.					
Access Door for storage of propane tank or gas lines.					
New Stylish Vented Doors to Store your Gas Bottle.					
Specifications					
Stainless Steel	304 Grade				
Dimensions			Cut out Dimensions		
L 83.8 cm	D 4.9 cm	H 55.7 cm	L 79.0 cm	D 5.8 cm	H 50.5 cm
CTN Length	0.78 Mts		CTN Height	0.09 Mts	
CTN Width	0.58 Mts		CTN Weight	8.5 Kg	1 Pcs

VENTED DOORS

Single Access Vented Door			#89977		
1.6mm Gauge Stainless Steel Construction.					
Double Walled. Allows for safe ventilation of your Outdoor kitchen.					
Ideeal for Fire Tables.					
Specifications					
Stainless Steel	304 Grade				
Dimensions			Cut out Dimensions		
L 54.2 cm	D 4.9 cm	H 55.7 cm	L 40.0 cm	D 5.8 cm	H 49.6 cm
CTN Length	0.48 Mts		CTN Height	0.08 Mts	
CTN Width	0.60 Mts		CTN Weight	4.5 Kg	1 Pcs

Large Vertical Vented Door			#89978		
1.6mm Gauge Stainless Steel Construction.					
Vented Gas Bottle Door. Allows for safe ventilation of your Outdoor kitchen.					
For Maximum Bottle Height Storage.					
Specifications					
Stainless Steel	304 Grade				
Dimensions			Cut out Dimensions		
L 45.2 cm	D 4.9 cm	H 77.5 cm	L 40.0 cm	D 5.8 cm	H 71.5 cm
CTN Length	0.80 Mts		CTN Height	0.08 Mts	
CTN Width	0.50 Mts		CTN Weight	5.5 Kg	1 Pcs

SLIM TRASH DRAWER

Enhance your outdoor kitchen with the Bull Slim Design Trash Drawer. Crafted from premium 304-grade stainless steel, this space-saving design keeps your outdoor kitchen tidy with a 38-liter plastic trash can. Enjoy versatility, convenience, and style while keeping your grilling area clutter-free!

Slim Trash Drawer			**#56941**		
Slim Trash Drawer Reveal			**#56960**		
304 Grade Stainless Steel Construction, Soft closing Slides and Slide-out Design					
Includes a 38liter Plastic Trash Can.					
Available with Modern Reveal Design, Practical Addition to any kitchen					
Specifications					
Stainless	304 Grade				
Dimensions			Cut out Dimensions		
L 41 cm	D 50 cm	H 69 cm	L 45 cm	D 55 cm	H 75 cm
CTN Length	0.5 Mts		CTN Height	0.75 Mts	
CTN Width	0.55 Mts		CTN Weight	18 Kg	1 Pcs

DOUBLE TRASH DRAWER

Upgrade your outdoor kitchen with the Bull Double Trash/Recycle Drawer, made from sturdy 304stainless steel. This drawer includes two 30-liter cans for easy waste separation. The soft-closing,heavy-duty slide rails ensure quiet operation. Designed to seamlessly integrate with Bull's grill and outdoor kitchen equipment, it's the perfect addition to any outdoor space.

Double Trash Drawer			**#56935**		
Double Trash Drawer Reveal			**#56950**		
304 Grade 1.6mm Gauge, Stainless Steel Construction, Soft closing Slides					
Includes two 30 liter Plastic Trash Cans, Sepeartes General Waste from Recycled					
Available with Modern Reveal Design, Practical Addition to any kitchen					
Specifications					
Stainless	304 Grade				
Dimensions			Cut out Dimensions		
L 45 cm	D 58.4 cm	H 69 cm	L 45.5 cm	D 59 cm	H 62 cm
CTN Length	0.8 Mts		CTN Height	0.67 Mts	
CTN Width	0.65 Mts		CTN Weight	24.7 Kg	1 Pcs

DRAWERS

Gas Tank/Trash Drawer			#56825		
Gas Tank/Trash Drawer Reveal			#56830		
1.6mm Gauge Stainless Steel Construction. Storage for Propane Tank/Trash Can.					
Enclosed Slide-Out Drawer - Soft Closing System. Ventilated.					
A Versatile Component for your Outdoor Kitchen					
Specifications					
Stainless Steel	304 Grade				
Dimensions			Cut out Dimensions		
L 41.9 cm	D 40.6cm	H 55.9 cm	L 36.4 cm	D 41.1cm	H 49.0 cm
CTN Length	0.45 Mts		CTN Height	0.46 Mts	
CTN Width	0.60 Mts		CTN Weight	13.5 Kg	1 Pcs

Double Drawer			#56985		
Double Drawer			#56990		
1.6mm Gauge Stainless Steel Construction.					
Enclosed Drawer - Soft Closing System. St orage space.					
When you just need Utensil Drawers.					
Specifications					
Stainless Steel	304 Grade				
Dimensions			Cut out Dimensions		
L 35.4 cm	D 52.1 cm	H 53.3 cm	L 32.5 cm	D 53.0 cm	H 49.0 cm
CTN Length	0.56 Mts		CTN Height	0.52 Mts	
CTN Width	0.38 Mts		CTN Weight	20 Kg	1 Pcs

Triple Drawer			#58110		
Triple Drawer			#56990		
1.6mm Gauge Stainless Steel Construction.					
Enclosed Drawer - Soft Closing System. Storage space.					
Maximise the Space in your Outdoor Kitchen					
Specifications					
Stainless Steel	304 Grade				
Dimensions			Cut out Dimensions		
L 53 cm	D 40cm	H 61cm	L 46.5cm	D 42cm	H 62.5cm
CTN Length	0.55 Mts		CTN Height	0.71. Mts	
CTN Width	0.44 Mts		CTN Weight	21 Kg	1 Pcs

DRAWERS

Single Drawer			**#09970**		
Single Drawer Reveal			**#19970**		
1.6mm Gauge Stainless Steel Construction.					
Slide-Out Drawer - Soft Closing System. Storage Space for your grilling accessories.					
Place this conveniently under your grill.					
Specifications					
Stainless Steel	304 Grade				
Dimensions			Cut out Dimensions		
L 64.8cm	D 51.8 cm	H 15.2 cm	L 60.0 cm	D 52.2	H 10.2 cm
CTN Length	0.67 Mts		CTN Height	0.18 Mts	
CTN Width	0.58 Mts		CTN Weight	8.7 Kg	1 Pcs

Large Single Drawer			**#09980**		
Large Single Drawer Reveal			**#19980**		
1.6mm Gauge Stainless Steel Construction.					
Slide-Out Drawer - Soft Closing System. Storage Space for your grilling accessories.					
For your oversized grilling toys.					
Specifications					
Stainless Steel	304 Grade				
Dimensions			Cut out Dimensions		
L 68.3cm	D 60.2 cm	H 29.3 cm	L 63.0 cm	D 60.2 cm	H 25.5 cm
CTN Length	0.71 Mts		CTN Height	0.36 Mts	
CTN Width	0.65 Mts		CTN Weight	18.5 Kg	1 Pcs

Warming Drawer			**#85747CE**		
Warmin Drawing Reveal			**#857860CE**		
1.6mm Gauge Stainless Steel Construction.					
Variable Temperature Control.. Moisture Vent Control, Heat-On Light.					
Keepy your food warm ... but don't overcook it!					
Specifications					
Stainless Steel	304 Grade		220V, 50Hz, 450W, 2A		
Dimensions			Cut out Dimensions		
L 76.2 cm	D 50.7	H 29.4 cm	L 72.5 cm	D 52.0 cm	H 25.5 cm
CTN Length	0.82 Mts		CTN Height	0.32 Mts	
CTN Width	0.59 Mts		CTN Weight	32 Kg	1 Pcs

DOOR / TRIPLE DRAWER COMBO

Introducing our door/triple door combo, crafted from robust 304-grade 16-gauge stainless steel. Available from 2025 in the modern reveal design only, this combo not only adds a stylish touch but also bolsters durability. With identical cutout dimensions to your current setup and a reversible design, it offers a seamless upgrade. Fully enclosed drawer components guarantee secure storage, while the double-lined door provides insulation and a touch of sophistication.

80cm Door/ Triple Drawer Combo			**#25900CE**		
100cm Door/ Triple Drawer Combo			**#25920CE**		
304 Grade 1.6mm Gauge, Stainless Steel Construction, Soft closing Slides					
Fully enclosed drawer components Double lined door					
Available with Modern Reveal Design Only, Practical Addition to any kitchen					
Specifications					
Stainless	304 Grade				
Dimensions			Cut out Dimensions		
L 80 cm	D 52 cm	H 50 cm	L 85 cm	D 55 cm	H 55 cm
CTN Length	0.78 Mts		CTN Height	0.51 Mts	
CTN Width	0.78 Mts		CTN Weight	Kg	1 Pcs

DOOR / DRAWERS COMBOS

Make the most of your space with these convenient combos to match your grill size.

80cm Door/Drawer Combo			**#25876CE**		
80cm Door/Drawer Combo Reveal			**#25890CE**		
1.6mm Gauge Stainless Steel Construction.					
Fully Enclosed Drawer Components - Soft Closing System.					
Double Lined Doors. Internal liner #89973 not included. Reversable Design.					
Specifications					
Stainless Steel	304 Grade				
Dimensions			Cut out Dimensions		
L 83.8 cm	D 52.1 cm	H 55.9 cm	L 79.0 cm	D 52.8 cm	H 50.5 cm
CTN Length	0.87 Mts		CTN Height	0.59 Mts	
CTN Width	0.57 Mts		CTN Weight	26 Kg	1 Pcs

Gas Tank Drawer/Door Combo			**#65784CE**		
Gas Tank Drawer/Door Combo Reveal			**#65790CE**		
1.6mm Gauge Stainless Steel Construction.					
Single Access door and Ventilated Trash and Propane Drawer.					
Soft Closing System. Internal liner #89973 not included. Reversable Design					
Specifications					
Stainless Steel	304 Grade				
Dimensions			Cut out Dimensions		
L 83.8 cm	D 40.6 cm	H 55.9 cm	L 79.0 cm	D 41.0 cm	H 50.5 cm
CTN Length	0.46 Mts		CTN Height	0.59 Mts	
CTN Width	0.57 Mts		CTN Weight	20.5 Kg	1 Pcs

100cm Door/Drawer Combo			**#55875CE**		
100cm Door/Drawer Combo Reveal			**#55890CE**		
1.6mm Gauge Stainless Steel Construction.					
Fully Enclosed Drawer Components - Soft Closing System.					
Double Lined Doors. Internal liner #55877 not included.Reversable Design.					
Specifications					
Stainless Steel	304 Grade				
Dimensions			Cut out Dimensions		
L 102.9 cm	D 52.1cm	H 55.9 cm	L 98.0 cm	D 53.0 cm	H 50.5 cm
CTN Length	1.08 Mts		CTN Height	0.59 Mts	
CTN Width	0.57 Mts		CTN Weight	33.0 Kg	1 Pcs

OTHERS

Paper Towel Dispenser			#73624		
Paper Towel Dispenser Reveal			**#93008**		
1.6mm Gauge Stainless Steel Construction.					
Holds one standard Roll of Paper Towels. Pull-Out Rail.					
A clean Space for your Towel Roll.					
Specifications					
Stainless Steel	304 Grade				
Dimensions			Cut out Dimensions		
L 27.9 cm	D 28.3 cm	H 40.6 cm	L 23.6 cm	D 29.3 cm	H 36.3 cm
CTN Length	0.42 Mts		CTN Height	0.33 Mts	
CTN Width	0.31 Mts		CTN Weight	7.20 Kg	1 Pcs

Drop-In Cutting Board			#66007		
1.6mm Gauge Stainless Steel Construction. Syphon not included					
Removable Stainless Steel Lid, Hard Plastic Cutting Board. Drain in Bottom of Unit.					
Drop a Cutting Board in your Kitchen Top.					
Specifications					
Stainless Steel	304 Grade				
Dimensions			Cut out Dimensions		
L 32.1 cm	D 44.0 cm	H 6.7cm	L 28.6 cm	D 44.5 cm	H 8.4 cm
CTN Length	0.33 Mts		CTN Height	0.14 Mts	
CTN Width	0.50 Mts		CTN Weight	5.90 Kg	1 Pcs

FINISHING FRAMES

46 cm Bar Centre Frame			#97624	
304 Grade Stainless Steel Construction.				
Designed for: 46cm Bar Caddy.				
CTN Length	0.59 Mts	CTN Height	0.11 Mts	
CTN Width	0.29 Mts	CTN Weight	Kg	1 Pcs

76 cm Bar Centre Frame			#97625	
304 Grade Stainless Steel Construction.				
Designed for: 76cm Bar Caddy.				
CTN Length	1.11 Mts	CTN Height	0.11 Mts	
CTN Width	0.26 Mts	CTN Weight	1.97 Kg	1 Pcs

FINISHING FRAMES

Those extra finishing touches to all our grills and components.

34cm Finishing Frame			#93007	
34cm Finishing Frame Reveal			#93008	
304 Grade Stainless Steel Construction.				
Designed for: Double Side Burner #30008/9CE & Pro Side Burner #60018/9CE.				
CTN Length	0.39 Mts	CTN Height	0.05 Mts	
CTN Width	0.24 Mts	CTN Weight	1.13 Kg	1 Pcs

60cm Grill Frame			#97001	
304 Grade Stainless Steel Construction.				
Designed for: Plancha Griddle #97008/9CE.				
CTN Length	0.8 Mts	CTN Height	0.07 Mts	
CTN Width	0.25 Mts	CTN Weight	1.25 Kg	1 Pcs

97cm Grill Frame			#58726	
97cm Grill Frame Reveal			#58730	
304 Grade Stainless Steel Construction.				
Designed for: Brahma Grill #57568/9CE and Renegade Grill #32368/9CE.				
CTN Length	1.11 Mts	CTN Height	0.08 Mts	
CTN Width	0.26 Mts	CTN Weight	1.97 Kg	1 Pcs

64cm Grill Frame			#69428	
64cm Grill Frame Reveal			#69429	
304 Grade Stainless Steel Construction.				
Designed for: Steer Grill #69008/9CE.				
CTN Length	0.78 Mts	CTN Height	0.07 Mts	
CTN Width	0.25 Mts	CTN Weight	1.50 Kg	1 Pcs

116 cm Grill Frame			#72008	
116 cm Grill Frame Reveal			#72009	
304 Grade Stainless Steel Construction.				
Designed for: Diablo Grill #62648/9CE.				
CTN Length	1.11 Mts	CTN Height	0.08 Mts	
CTN Width	0.26 Mts	CTN Weight	1.97 Kg	1 Pcs

76cm Grill Frame			#49328	
76cm Grill Frame Reveal			#49330	
304 Grade Stainless Steel Construction.				
Designed for: Angus, Lonestar and Outlaw Grills.				
CTN Length	0.92 Mts	CTN Height	0.07 Mts	
CTN Width	0.26 Mts	CTN Weight	1.80 Kg	1 Pcs

120 cm Grill Frame			#74327	
304 Grade Stainless Steel Construction.				
Designed for: 7 Burner Grill Head #18248/9CE.				
CTN Length	1.31 Mts	CTN Height	0.08 Mts	
CTN Width	0.26 Mts	CTN Weight	2.10 Kg	1 Pcs

Refrigerator Frame			#99935	
Refrigerator Frame Reveal			#99940	
304 Grade Stainless Steel Construction.				
Designed for: Standard Refrigerator #11002CE.				
CTN Length	0.95 Mts	CTN Height	0.28 Mts	
CTN Width	0.65 Mts	CTN Weight	19 Kg	10 Pcs

Outdoor Fridge / Kegorator Frame			#13900/#17999	
304 Grade Stainless Steel Construction.				
Designed for: Outdoor Fridge, Double Drawer Fridge, and Kegorator.				
CTN Length	0.98 Mts	CTN Height	0.28 Mts	
CTN Width	0.64 Mts	CTN Weight	19 Kg	10 Pcs

INTERNAL DOOR LINERS

Keep your storage clean and tidy with our lining pantries.

Internal Liner Horizontal Door			#89972
Fits Horizontal Access Door #89970 with adjustable shelf.			
304 grade stainless steel construction.			
CTN Length	0.66 Mts	CTN Height	0.58 Mts
CTN Width	0.47 Mts	CTN Weight	15 Kg / 1 Pcs

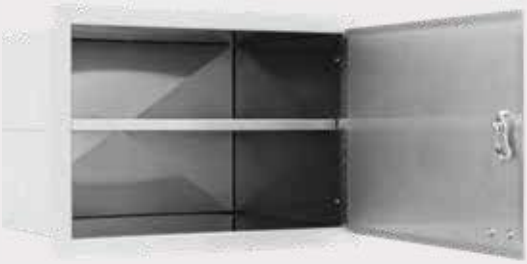

Internal Liner Vertical Door/Combo			#89973
Fits #89975 / #98552 / #65784 / #25876 with adjustable shelf.			
304 grade stainless steel construction.			
CTN Length	0.57 Mts	CTN Height	0.58 Mts
CTN Width	0.47 Mts	CTN Weight	12 Kg / 1 Pcs

Internal Liner 80cm Double Door			#74000
Fits 80cm Double Door #33568 with adjustable shelf.			
304 grade stainless steel construction.			
CTN Length	0.86 Mts	CTN Height	0.58 Mts
CTN Width	0.56 Mts	CTN Weight	18 Kg / 1 Pcs

Internal Liner 100cm Double Door			#74100
Fits 100cm Double Door #34000 with adjustable shelf.			
304 grade stainless steel construction.			
CTN Length	1.05 Mts	CTN Height	0.58 Mts
CTN Width	0.56 Mts	CTN Weight	21 Kg / 1 Pcs

Internal Liner 100cm Combo			#55877
Fits 100cm Door / Drawer Combo #55875 with adjustable shelf.			
304 grade stainless steel construction.			
CTN Length	0.55 Mts	CTN Height	0.59 Mts
CTN Width	0.57 Mts	CTN Weight	12 Kg / 1 Pcs

ISLAND VENTS

No Outdoor Kitchen should be without one

Venting Package (2 sets of frame & screen)				**#43500**		
Venting Screen only				**#44500**		
Made of stainless steel to resist rust and corrosion						
Adds cross-ventilation air flow to outdoor kitchen designs.						
Length	0.35	Mts	Height	0.17		Mts
Width	0.02	Mts	Weight	0.5	Kg	1 Pcs

INSULATED GRILL JACKETS

Use our Jackets to Ensure Protection to your Wooden Build

Insulated Grill Jacket			**#47017**	
For 80cm Bull Grills.				
Required only if the kitchen structure is combustible.				
CTN Length	1.02 Mts	CTN Height	0.29 Mts	
CTN Width	0.63 Mts	CTN Weight	24.3 Kg	1 Pcs

Insulated Grill Jacket			**#47018**	
For 100cm Bull Grills.				
Required only if the kitchen structure is combustible.				
CTN Length	1.2 Mts	CTN Height	0.30 Mts	
CTN Width	0.62 Mts	CTN Weight	27.6 Kg	1 Pcs

EXTRACTOR HOOD

Because you need to Ventilate your Enclosed Grilling Area

Extractor Hood for 80cm Grills			**#66009CE**		
304 Stainless Steel Construction. Sealed IPX 4 LED Light Fitting.					
Wall Mounting Hood with Extractor Fan & Speed Contoller.					
Specifications					
Flow 700 m³/h	Power 0.184kW		220V, 50Hz, 1.8A		
Dimensions			Cut out Dimensions		
L 100cm	D 70 cm	H 43cm	L N/A	D N/A	H N/A
CTN Length	1.10 Mts		CTN Height	0.88 Mts	
CTN Width	0.51 Mts		CTN Weight	65 Kg	1 Pcs

Extractor Hood for 100cm Grills			**#66098CE**		
304 Stainless Steel Construction. Sealed IPX 4 LED Light Fitting.					
Wall Mounting Hood with Extractor Fan & Speed Controller.					
Specifications					
Flow 700 m³/h	Power 0.184kW		220V, 50Hz, 1.8A		
Dimensions			Cut out Dimensions		
L 120 cm	D 70 cm	H 43cm	L N/A	D N/A	H N/A
CTN Length	1.30 Mts		CTN Height	0.88 Mts	
CTN Width	0.51 Mts		CTN Weight	75 Kg	1 Pcs

BULL

BULL
OUTDOOR KITCHENS

WITH EVERY OUTDOOR KITCHEN PURCHASED YOU GET:

Care and Maintenence
Tool Box

Waterproof & Breathable
Sumbrella Surlast Cover

. . . AND WE WILL BRING YOUR OUTDOOR KITCHEN TO YOUR KERB SIDE

ALL YOU HAVE TO DO IS PLUG & PLAY

POWER Q - STANDARD

Standard Features	
#31006	Standard ✓ or N/A ×
Grill Type as Standard	Angus #47628/9CE
Standard Fridge #11002CE	✓
Stucco Base Standard	✓
Tile Top 30cm x 30cm with Bullnose	✓
Horizontal Access Door #89970	✓
Power outlet & Switch	✓
Sink & Faucet	×
Structure Dimensions	
Base Footprint Size	176 x 70 cm
Top Size	195 x 79 cm
Upgrades	
Grill Upgrades/Downgrades within the same size kitchen structure	Steer #69008CE Bison #88787CE Lonestar #87048/9CE
Base Upgrade Options	Stucco Rock #12397 Rock/Gres #33006
Upgrade from Tile Top To Solid Gres Coverlam	#43004
Fridge upgrades	#13700CE / #13100CE / #17400CE / #17900CE
Add SS Lining with middle shelf for Horizontal Access Door	#89972
Upgradeable Doors	Double Door #33568 Door/Drawer Combo #25876 Trash/Door Combo #65784
Add SS Lining with adjustable shelf for above Doors	Double Door Lining #74000 Combo Lining #89973
Add Drawers (#09970 can only fit above the Access Door)	Single Drawer #09970 Double Drawer #56985 Gas Drawer #56825
Optional	
Grill Frame optional	#49328
Side Burner optional	#60008/9CE
Bar Caddy optional (if fridge is removed)	#97623 / #85624
Cutting Board optional #66007	×
Bottle Opener optional #66006	✓
Large vertical side door	#89978
Warranty Details	
Island Structure	2 years
Kitchen Top	2 years
Gas Hose	*2 years
*As per international Gas Safety Regulations	*must replace every 2 years
Packing Dimensions	
Wooden Crate Length	220 cm
Wooden Crate Width	90 cm
Wooden Crate Height	200 cm
Wooden Crate Cube	3.96 m^3
Complete Crated Weight	Stucco 395 Kg Rock 500 Kg

This Power-Q Outdoor Kitchen is a wonderful addition to any smaller backyard or patio area. It comes standard with a refrigerator to keep your beverages and food cold for all your entertainment needs, while the counter space is great for preparing your favourite recipes.

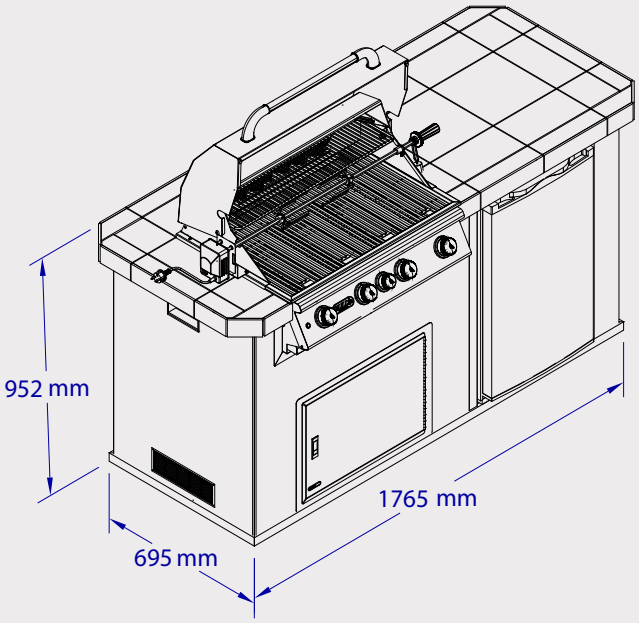

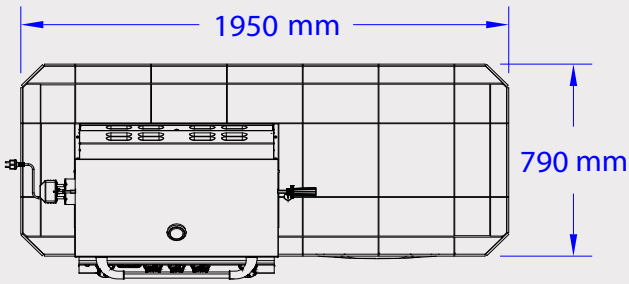

POWER Q - UPGRADED

TOP	Solid Gres - Titan Antracita
BASE	Solid Gres - Tempo Antracita

Upgrades	Item
#25876	80cm Door / Drawer Combo
#69428	65cm Grill Frame
#69008CE	Steer Grill

TOP	Solid Gres - Bluestone Negro
BASE	Standard Stucco - Blue Grey

Upgrades	Item
#25876	80cm Door / Drawer Combo
#17900CE	Premium Outdoor Rated Kegorator
#49328	80cm Grill Frame
#89978	Vented Side Door

TOP	Solid Gres - Onice Honey
BASE	Stucco Rock - White Ash

Upgrades	Item
#25876	80cm Door / Drawer Combo
#49328	80cm Grill Frame
#13700CE	Premium Outdoor Rated Fridge

TOP	Solid Gres - Titan Antracita
BASE	Solid Gres - Titan Antracita

Upgrades	Item
#25876	80cm Door / Drawer Combo
#49328	80cm Grill Frame
#89978	Vented Side Door

Standard Features	
#31010	Standard ✓ or N/A ×
Grill Type as Standard	Angus #47628/9CE
Standard Fridge #11002CE	✓
Stucco Base Standard	✓
Tile Top 30cm x 30cm with Bullnose	✓
Horizontal Access Door #89970	✓
Power outlet & Switch	✓
Sink & Faucet	✓
Structure Dimensions	
Base Footprint Size	220x 70 cm
Top Size	243 x 79 cm
Upgrades	
Grill Upgrades/Downgrades within the same size kitchen structure	Bison #88787CE Outlaw #26038/9CE Lonestar #87048/9CE
Base Upgrade Options	Stucco Rock #12397 Rock/Gres #33006
Upgrade from Tile Top To Solid Gres Coverlam	#43004
Fridge upgrades	#13700CE / #13100CE / #17400CE / #17900CE
Add SS Lining with middle shelf for Horizontal Access Door	#89972
Upgradeable Doors	Double Door #33568 Door/Drawer Combo #25876 Trash/Door Combo #65784
Add SS Lining with adjustable shelf for above Doors	Double Door Lining #74000 Combo Lining #89973
Add Drawers (#09970 can only fit above the Access Door)	Single Drawer #09970 Double Drawer #56985 Gas Drawer #56825
Optional	
Grill Frame optional	#49328
Side Burner optional	#60008/9CE
Bar Caddy optional (if fridge or sink are removed)	#97623 / #85624
Cutting Board optional #66007	×
Bottle Opener optional #66006	✓
Large vertical side door	#89978
Warranty Details	
Island Structure	2 years
Kitchen Top	2 years
Gas Hose	*2 years
*As per international Gas Safety Regulations	*must replace every 2 years
Packing Dimensions	
Wooden Crate Length	260 cm
Wooden Crate Width	95 cm
Wooden Crate Height	200 cm
Wooden Crate Cube	4.94 m^3
Complete Crated Weight	Stucco 420 Kg Rock 550 Kg

ODK - STANDARD

This Outdoor Kitchen is one of our first and most complete outdoor kitchens, provides a backyard entertainment centre and the space to handle all of your outdoor grilling needs. This is the ultimate grilling & entertaining station.

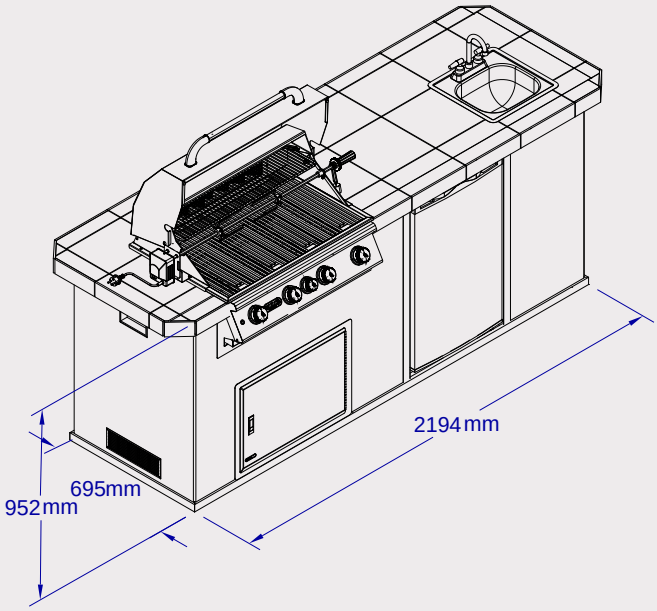

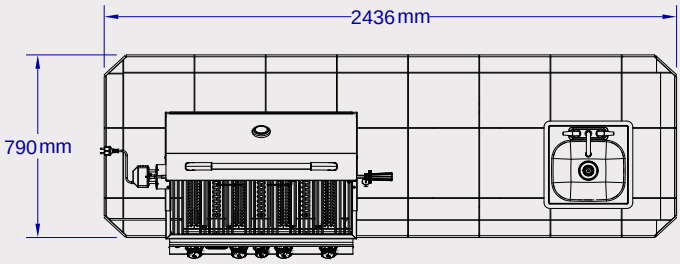

ODK - UPGRADED

TOP	Solid Gres - Titan Antracita
BASE	Solid Gres - Tempo Antracita

Upgrades	Item
#49328	80cm Grill Frame
#33568	80cm Double Door
#56985	Double Drawer
#13700CE	Premium Fridge

TOP	Solid Gres - Onice Honey
BASE	Solid Gres - Travertino White

Upgrades	Item
#49328	80cm Grill Frame
#25876	80cm Door/Drawer Combo
#13700CE	Premium Fridge
#22391CE	Premium Large Sink
#60008/9CE	Drop-In Single Side Burner

TOP	Tile Top - Boulevard Andrassy
BASE	Standard Stucco - Mesa Tan

Upgrades	Item
#49328	80cm Grill Frame
#33568	80cm Double Door

TOP	Solid Gres - Moma Antracita
BASE	Rock - Grey Rock

Upgrades	Item
#49328	80cm Grill Frame
#25876	80cm Door/Drawer Combo
#66006	Bottle Opener & Catch Tray

ODK BBQ - STANDARD

The BBQ Outdoor Kitchen is perfect for grilling your favourite recipes. The “L” shaped BBQ design will become the centre of your outdoor cooking and entertainment.

Standard Features	
#31014	Standard ✓ or N/A ×
Grill Type as Standard	Angus #47628/9CE
Standard Fridge #11002CE	✓
Stucco Base Standard	✓
Tile Top 30cm x 30cm with Bullnose	✓
Horizontal Access Door #89970	✓
Power outlet & Switch	✓
Sink & Faucet	✓
Structure Dimensions	
Base Footprint Size	220x 70 cm
Top Size	260 x 109 cm
Upgrades	
Grill Upgrades/Downgrades within the same size kitchen structure	Bison #88787CE Outlaw #26038/9CE Lonestar #87048/9CE
Base Upgrade Options	Stucco Rock #12397 Rock/Gres #33006
Upgrade from Tile Top To Solid Gres Coverlam	#43004
Fridge upgrades	#13700CE / #13100CE / #17400CE / #17900CE
Add SS Lining with middle shelf for Horizontal Access Door	#89972
Upgradeable Doors	Double Door #33568 Door/Drawer Combo #25876 Trash/Door Combo #65784
Add SS Lining with adjustable shelf for above Doors	Double Door Lining #74000 Combo Lining #89973
Add Drawers (#09970 can only fit above the Access Door)	Single Drawer #09970 Double Drawer #56985 Gas Drawer #56825
Optional	
Grill Frame optional	#49328
Side Burner optional	#60008/9CE
Bar Caddy optional (if fridge or sink are removed)	#97623 / #85624
Cutting Board optional #66007	×
Bottle Opener optional #66006	✓
Large vertical side door	#89978
Warranty Details	
Island Structure	2 years
Kitchen Top	2 years
Gas Hose	*2 years
*As per international Gas Safety Regulations	*must replace every 2 years
Packing Dimensions	
Wooden Crate Length	270 cm
Wooden Crate Width	150 cm
Wooden Crate Height	200 cm
Wooden Crate Cube	8.1 m³
Complete Crated Weight	Stucco 550 Kg Rock 850 Kg

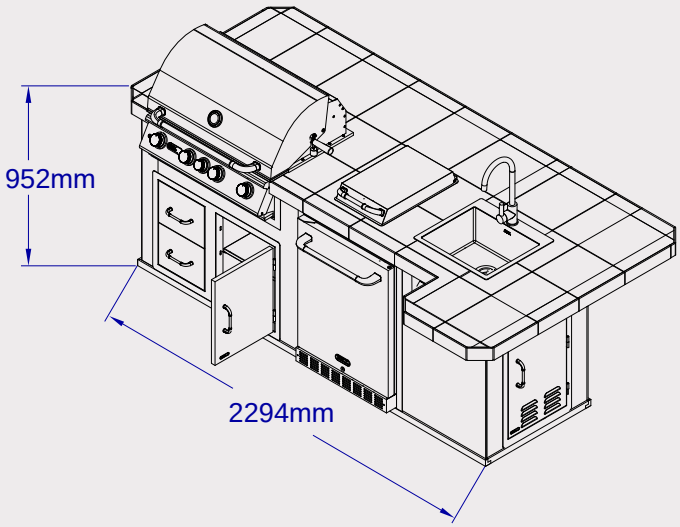

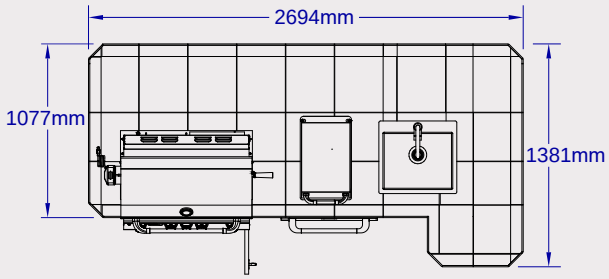

IMAGE DISPLAYED CONTAINS UPGRADED FEAUTURES

ODK BBQ - UPGRADED

TOP	Solid Gres - Onice Honey
BASE	Solid Gres - Travertino White

Upgrades	Item
#33568	80cm Double Door
#13700CE	Premium Outdoor Rated Refrigerator
#60008/9CE	Drop-In Single Side Burner
#72000CE	Rockford Fosgate Bluetooth System
#49328	80cm Grill Frame

TOP	Porcelain Tile - Aragon Marango
BASE	Rock - Golden Harvest

Upgrades	Item
#25876	80cm Door / Drawer Combo
#13700CE	Premium Outdoor Rated Refrigerator
#60008/9CE	Drop-In Single Side Burner
#49328	80cm Grill Frame
#66006	Bottle Opener
#72000CE	Rockford Fosgate Bluetooth System

ODK 3Mts - STANDARD

Standard Features	
#31013M	Standard ✓ or N/A ×
Grill Type as Standard	Angus #47628/9CE
Standard Fridge #11002CE	✓
Stucco Base Standard	✓
Tile Top 30cm x 30cm with Bullnose	✓
Horizontal Access Door #89970	✓
Power outlet & Switch	✓
Sink & Faucet	✓
Structure Dimensions	
Base Footprint Size	280x 70 cm
Top Size	300 x 80 cm
Upgrades	
Grill Upgrades/Downgrades within the same size kitchen structure	ALL GRILLS
Base Upgrade Options	Stucco Rock #12397 Rock/Gres #33006
Upgrade from Tile Top To Solid Gres Coverlam	#43004
Fridge upgrades	#13700CE / #13100CE / #17400CE / #17900CE
Add SS Lining with middle shelf for Horizontal Access Door	#89972
Upgradeable Doors	Double Door #33568 Door/Drawer Combo #25876 Trash/Door Combo #65784
Add SS Lining with adjustable shelf for above Doors	Double Door Lining #74000 Combo Lining #89973
Add Drawers (#09970 can only fit above the Access Door)	Single Drawer #09970 Double Drawer #56985 Gas Drawer #56825
Optional	
Grill Frame optional	#49328
Side Burner optional	#60008/9CE
Bar Caddy optional (if fridge or sink are removed)	#97623 / #85624
Cutting Board optional #66007	✓
Bottle Opener optional #66006	✓
Large vertical side door	#89978
Warranty Details	
Island Structure	2 years
Kitchen Top	2 years
Gas Hose	*2 years
*As per international Gas Safety Regulations	*must replace every 2 years
Packing Dimensions	
Wooden Crate Length	320 cm
Wooden Crate Width	95 cm
Wooden Crate Height	200 cm
Wooden Crate Cube	6.08 m³
Complete Crated Weight	Stucco 550 Kg Rock 800 Kg

This Outdoor Kitchen is one of our first and most complete outdoor barbecue kitchens, provides a backyard entertainment centre and the space to handle all of your outdoor grilling needs. This is the ultimate grilling & entertaining station.

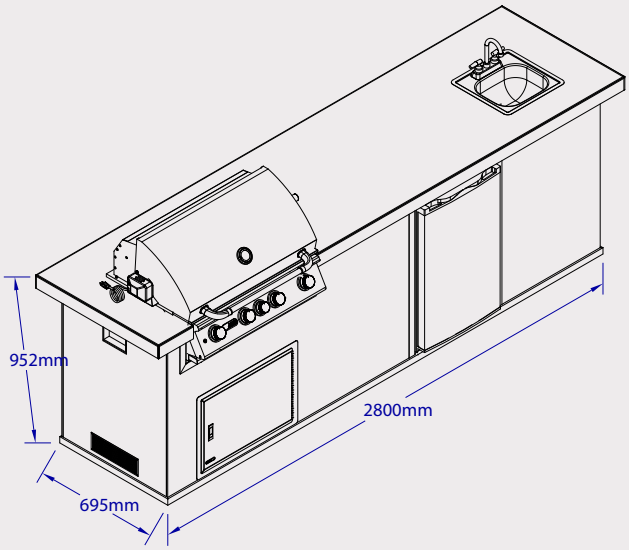

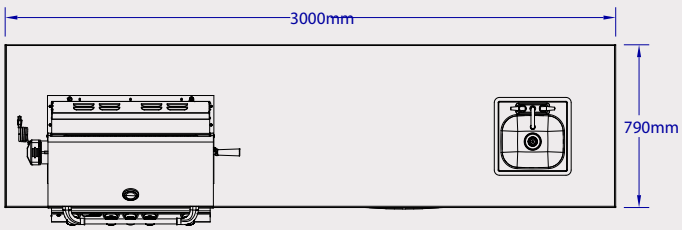

ODK 3Mts - UPGRADED

TOP	Solid Gres - Supremo Pulido
BASE	Solid Gres - Travertino White

Upgrades	Item
#25876	80cm Door / Drawer Combo
#56985	Double Drawer
#22391	Large Sink
#30008/9CE	Slide in Double Side Burner
#49328	80cm Grill Frame
#93007	35cm Finishing Frame

TOP	Solid Gres - Moma Antracita
BASE	Solid Gres - Moma Antracita

Upgrades	Item
#25876	80cm Door / Drawer Combo
#13700CE	Premium Outdoor Rated Refrigerator
#56985	Double Drawer
#30008/9CE	Slide in Double Side Burner
#66006	Bottle Opener and Catch
#89976	Right Swing Vertical Door
#49328	80cm Grill Frame
#93007	35cm Finishing Frame

TOP	Solid Gres - Supremo Pulido
BASE	Solid Gres - Travertino White

Upgrades	Item
#25876	80cm Door / Drawer Combo
#13700CE	Premium Outdoor Rated Refrigerator
#56825	Gas/Trash Drawer
#30008CE	Slide in Double Side Burner
#66006	Bottle Opener and Catch
#49328	80cm Grill Frame
#93007	35cm Finishing Frame
#72000CE	Rockford Fosgate Bluetooth System
#89975	Right Swing Vertical Door
#66124CE	Large Gas Pizza Oven

TOP	Solid Gres - Tempo Antracita
BASE	Solid Gres - Tempo Antracita

Upgrades	Item
#55875	100cm Door / Drawer Combo
#89975	Right Swing Vertical Door
#33568	80cm Double Door
#22391	Large Sink
#62648CE	Diablo Grill

JR - GOURMET Q

The Jr Gourmet Q - Outdoor Island Kitchen and its ample bar area can seat up to 4 people comfortably. Its smaller "L" shaped design allows for great outdoor entertainment or just simply creating your favourite recipes in a wonderful outdoor setting.

Standard Features	
#31022	Standard ✓ or N/A ×
Grill Type as Standard	Angus #47628/9CE
Standard Fridge #11002CE	✓
Stucco Base Standard	✓
Tile Top 30cm x 30cm with Bullnose	✓
Horizontal Access Door #89970	✓
Power outlet & Switch	✓
Sink & Faucet	×
Structure Dimensions	
Base Footprint Size	189 x 177 cm
Top Size	247 x 218 cm
Upgrades	
Grill Upgrades/Downgrades within the same size kitchen structure	Bison #88787CE Outlaw #26038/9CE Lonestar #87048/9CE
Base Upgrade Options	Stucco Rock #12397 Rock/Gres #33014
Upgrade from Tile Top To Solid Gres Coverlam	#43010
Fridge upgrades	#13700CE / #13100CE / #17400CE / #17900CE
Add SS Lining with middle shelf for Horizontal Access Door	#89972
Upgradeable Doors	Double Door #33568 Door/Drawer Combo #25876 Trash/Door Combo #65784
Add SS Lining with adjustable shelf for above Doors	Double Door Lining #74000 Combo Lining #89973
Add Drawers (#09970 can only fit above the Access Door)	Single Drawer #09970 Double Drawer #56985 Gas Drawer #56825
Optional	
Grill Frame optional	#49328
Side Burner optional	#60008/9CE
Bar Caddy optional (if fridge or sink are removed)	#97623 / #85624
Cutting Board optional #66007	✓
Bottle Opener optional #66006	✓
Large vertical side door	#89978
Warranty Details	
Island Structure	2 years
Kitchen Top	2 years
Gas Hose	*2 years
*As per international Gas Safety Regulations	*must replace every 2 years
Packing Dimensions	
Wooden Crate Length	230/150 cm
Wooden Crate Width	120/90 cm
Wooden Crate Height	190/150 cm
Wooden Crate Cube	7.27 m³
Complete Crated Weight	Stucco 650 Kg Rock 1100 Kg

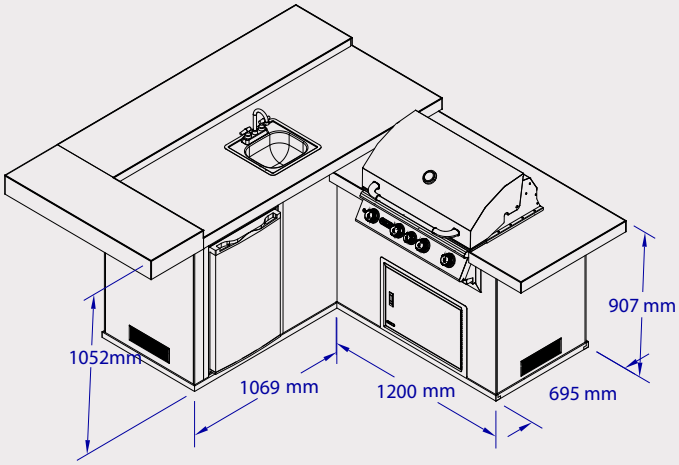

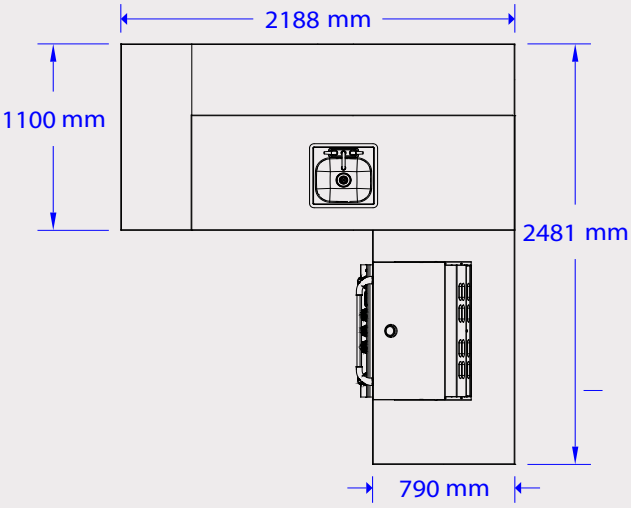

IMAGE DISPLAYED CONTAINS UPGRADED FEAUTURES

JR - GOURMET Q - UPGRADES

TOP	Porcelain Tile - Aragon Marango
BASE	Rock - Golden Harvest

Upgrades	Item
#13700CE	Premium Outdoor Rated Refrigerator
#49328	80cm Grill Frame

TOP	Porcelain Tile - Aragon Marango
BASE	Rock- Grey Stone

Upgrades	Item
#25876	80cm Door / Drawer Combo
#13700CE	Premium Outdoor Rated Refrigerator
#49328	80cm Grill Frame
#66006	Bottle Opener and Catch

GOURMET Q

The Gourmet Q Outdoor Island Kitchen is the largest of our islands. Its spacious bar area is perfect for a luxurious outdoor dining experience and ideal for entertaining. With its ample space for seating you can serve up your favourite grilling recipes in style.

Standard Features	
#31020	Standard ✓ or N/A ×
Grill Type as Standard	Angus #47628/9CE
Standard Fridge #11002CE	✓
Stucco Base Standard	✓
Tile Top 30cm x 30cm with Bullnose	✓
Horizontal Access Door #89970	✓
Power outlet & Switch	✓
Sink & Faucet	✓
Structure Dimensions	
Base Footprint Size	239 x 237 cm
Top Size	280 x 260 cm
Upgrades	
Grill Upgrades/Downgrades within the same size kitchen structure	ALL GRILLS
Base Upgrade Options	Stucco Rock #12397 Rock/Gres #33015
Upgrade from Tile Top To Solid Gres Coverlam	#43010
Fridge upgrades	#13700CE / #13100CE / #17400CE / #17900CE
Add SS Lining with middle shelf for Horizontal Access Door	#89972
Upgradeable Doors	Double Door #33568 Door/Drawer Combo #25876 Trash/Door Combo #65784
Add SS Lining with adjustable shelf for above Doors	Double Door Lining #74000 Combo Lining #89973
Add Drawers (#09970 can only fit above the Access Door)	Single Drawer #09970 Double Drawer #56985 Gas Drawer #56825
Optional	
Grill Frame optional	#49328
Side Burner optional	#60008/9CE
Bar Caddy optional (if fridge or sink are removed)	#97623 / #85624
Cutting Board optional #66007	✓
Bottle Opener optional #66006	✓
Large vertical side door	#89978
Warranty Details	
Island Structure	2 years
Kitchen Top	2 years
Gas Hose	*2 years
*As per international Gas Safety Regulations	*must replace every 2 years
Packing Dimensions	
Wooden Crate Length	270/180 cm
Wooden Crate Width	110/90 cm
Wooden Crate Height	200/165 cm
Wooden Crate Cube	8.61 m³
Complete Crated Weight	Stucco 750 Kg Rock 1200 Kg

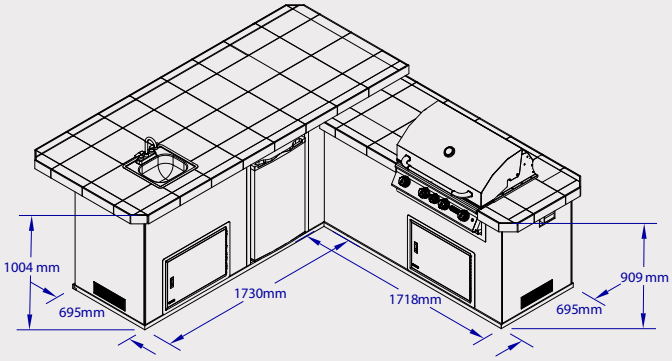

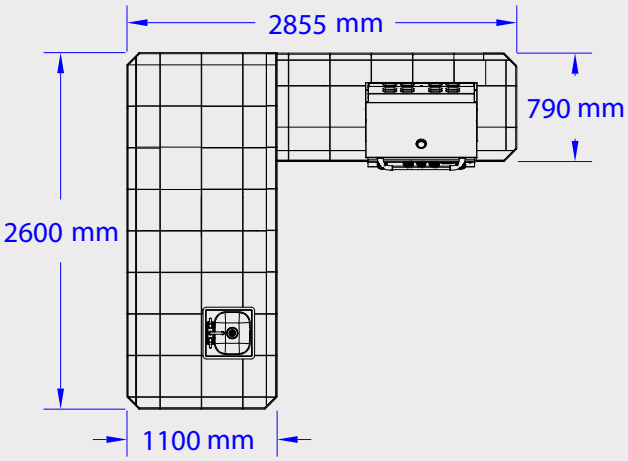

IMAGE DISPLAYED CONTAINS UPGRADED FEAUTURES

Standard Features	
#31099	Standard ✓ or N/A ×
Ovem Type as Standard	Large Wood Oven #66024
Standard Fridge #11002CE	✓
Stucco Base Standard	✓
Tile Top 30cm x 30cm with Bullnose	✓
Horizontal Access Door #89970	✓
Power outlet & Switch	×
Sink & Faucet	✓
Structure Dimensions	
Base Footprint Size	220x 70 cm
Top Size	243 x 80 cm
Upgrades	
Grill Upgrades/Downgrades within the same size kitchen structure	XL Wood #66040 Large Gas #66124 XL Gas #66140
Base Upgrade Options	Stucco Rock #12397 Rock/Gres #33006
Upgrade from Tile Top To Solid Gres Coverlam	#43010
Fridge upgrades	#13700CE / #13100CE / #17400CE / #17900CE
Add SS Lining with middle shelf for Horizontal Access Door	#89972
Upgradeable Doors	Double Door #33568 Door/Drawer Combo #25876 Trash/Door Combo #65784
Add SS Lining with adjustable shelf for above Doors	Double Door Lining #74000 Combo Lining #89973
Add Drawers (#09970 can only fit above the Access Door)	Single Drawer #09970 Double Drawer #56985 Gas Drawer #56825
Optional	
Grill Frame optional	×
Side Burner optional	#60008/9CE
Bar Caddy optional (if fridge or sink are removed)	×
Cutting Board optional #66007	×
Bottle Opener optional #66006	✓
Large vertical side door	#89978
Warranty Details	
Island Structure	2 years
Kitchen Top	2 years
Gas Hose	*2 years
*As per international Gas Safety Regulations	*must replace every 2 years
Packing Dimensions	
Wooden Crate Length	260 cm
Wooden Crate Width	90 cm
Wooden Crate Height	202 cm
Wooden Crate Cube	5.25 m³
Complete Crated Weight	Stucco 500 Kg Rock 700 Kg

PIZZA - Q ISLAND

The new Pizza Q Outdoor Island Kitchen is built for the ultimate pizza party. Our new wood-fired oven is built in Italy with solid welded construction, steel & electro galvanized steel. This pre-assembled oven sits in a very functional structure that has seating at both ends of the of the bar.

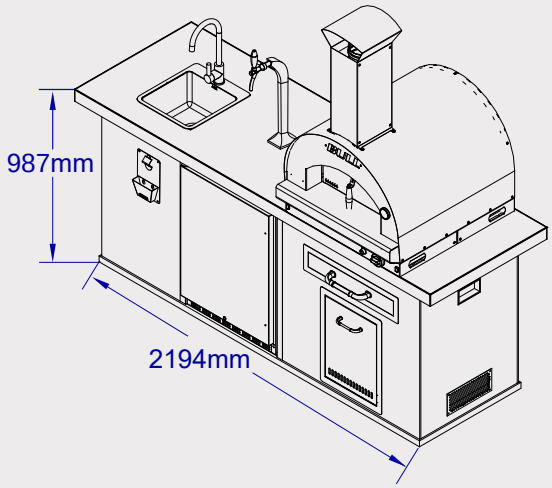

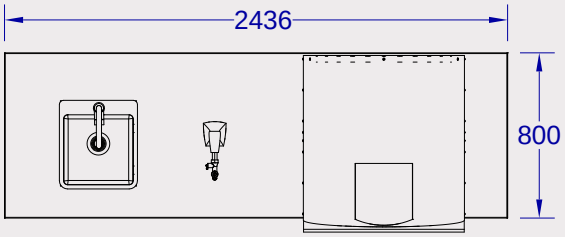

IMAGE DISPLAYED CONTAINS UPGRADED FEAUTURES

SQUARE LOW FIRE TABLE

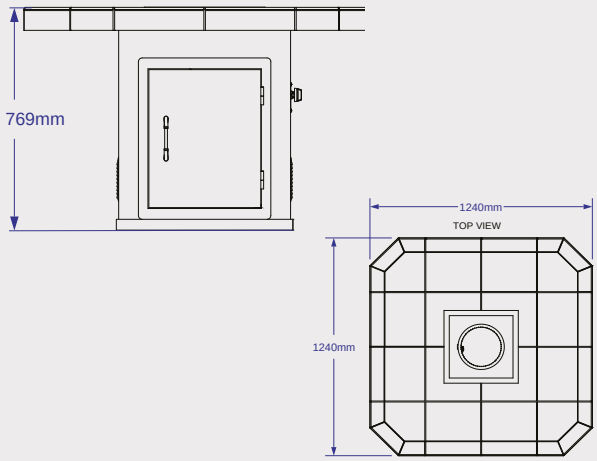

2M LOW FIRE TABLE

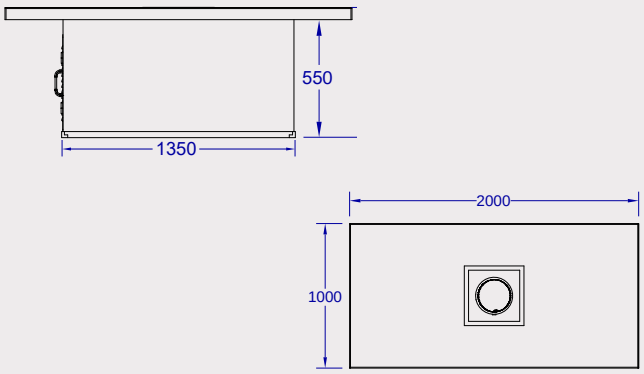

3M LOW FIRE TABLE

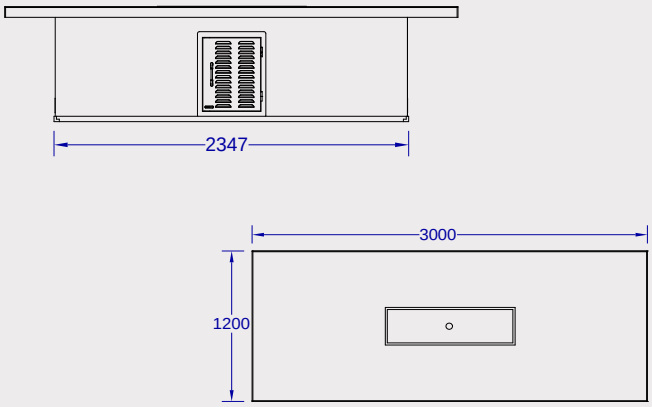

DECAGON BAR FIRE TABLE

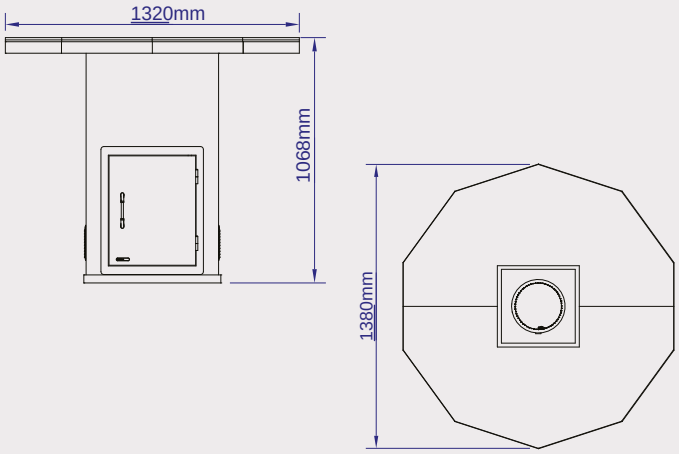

ENTERTAINERS - BAR

The Entertainer's Bar is a wonderful choice for those looking to have guests over for cocktails. This bar also includes plenty of counterspace for appetizers or whatever you choose to serve your guests.

STANDARD FEATURES	
#31031	
Grill Type as Standard.	×
Standard Fridge #11002.	✓
Stucco Base Standard.	✓
Rock / Gres Base Standard.	#31032
Tile Top 30cm x 30cm with Bullnose Single Tone or 2-Tone.	✓
Horizontal Access Door #89970	✓
Power outlet & Switch.	×
Bar Center	#85624
STRUCTURE DIMENSIONS	
Base Footprint Size.	192 x 85 cm
Top Size.	213 x 93 cm
UPGRADES	
Caddy Upgrades within the same size kichen structure	#97623
Upgrade Base Options	Stucco Rock #12397 Base tile Trim Upgrade #12406
Upgrade from Tile Top To Solid Gres Coverlam and Stainless Steel Bullnose.	#43010
Upgrade Stainless Steel Lining with middle shelf for #89970	#89972
Upgradeable Doors	Double Doors #33568 Dr/Drw Combo #25876 Trash/Door Combo #65785
Upgrade S/Steel Lining with middle shelf for Above.	Double Doors #74000 Combos #89973
Upgradeable Drawers	Single Drawer #09970
OPTIONALS	
Grill Frame optional.	×
Side Burner optional.	×
Fridge optional.	#13700CE / #13100CE / #17400CE / #17900CE
Bar Caddy optional.	×
Cutting Board optional.	×
Bottle Opener optional #66006.	×
Large vertical door option for gas bottle insertion from SIDE.	×
WARRANTY DETAILS	
Island Structure.	2 years
Kitchen Top.	2 years
PACKING DIMENSIONS	
Wooden Crate Length.	250 cm
Wooden Crate Width.	110 cm
Wooden Crate Height.	190 cm
Wooden Crate Cube.	5.23 m^3
Complete Crated Weight.	Stucco 400 Kg Rock 650 Kg

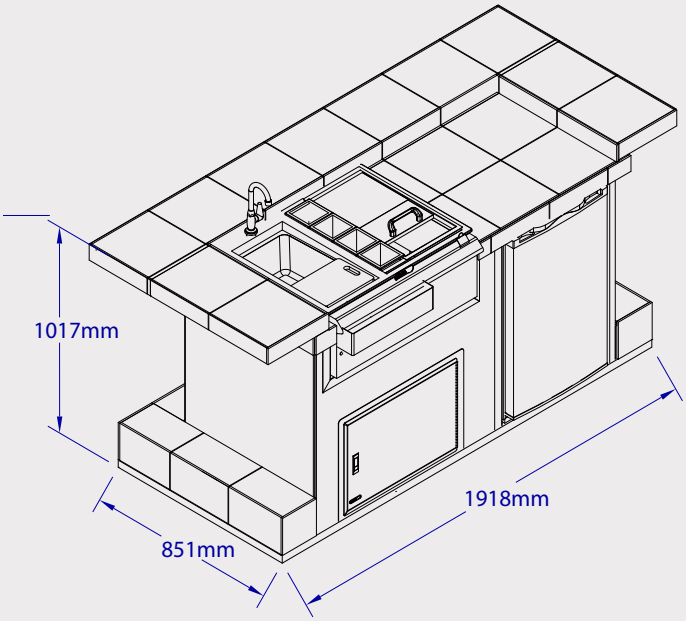

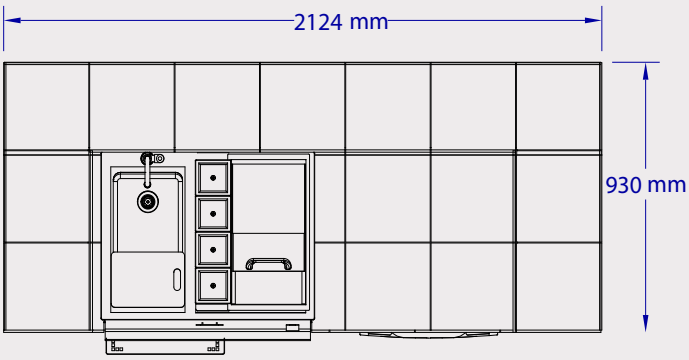

IMAGE DISPLAYED CONTAINS UPGRADED FEAUTURES

POWER - BAR

The Power Bar - Outdoor Island is a great place to gather around with friends and family for refreshments. This Island comfortably seats 4 adults. The 458mm Bar Centre is the perfect place to chill your favourite drinks and condiments.

STANDARD FEATURES	
#31047	
Grill Type as Standard.	×
Standard Fridge #11002.	×
Stucco Base Standard.	✓
Rock / Gres Base Standard.	#31048
Tile Top 30cm x 30cm with Bullnose Single Tone or 2-Tone.	✓
Horizontal Access Door #89970	✓
Power outlet & Switch.	×
Bar Centre	#85624
STRUCTURE DIMENSIONS	
Base Footprint Size.	126 x 65 cm
Top Size.	188 x 99 cm
UPGRADES	
Caddy Upgrades within the same size kichen structure	#97623
Upgrade Base Options	Stucco Rock #12397/ Base tile Trim Upgrade #12406
Upgrade from Tile Top To Solid Gres Coverlam and Stainless Steel Bullnose.	#43010
Upgrade Stainless Steel Lining with middle shelf for #89970	#89972
Upgradeable Doors	#89975 #98552
Upgrade S/Steel Lining with middle shelf for Above.	Vertical Door #89973
Upgradeable Drawers Single Drawer #09970 can only fit with #89970 when under a Bar Centre.	×
OPTIONALS	
Grill Frame optional.	×
Side Burner optional.	×
Fridge optional.	#13700CE / #13100CE / #17400CE / #17900CE
Bar Caddy optional.	×
Cutting Board optional.	×
Bottle Opener optional #66006.	✓
Large vertical door option for gas bottle insertion from SIDE. No linings possible on face.	×
WARRANTY DETAILS	
Island Structure.	2 years
Kitchen Top.	2 years
PACKING DIMENSIONS	
Wooden Crate Length.	200 cm
Wooden Crate Width.	120 cm
Wooden Crate Height.	1.8 cm
Wooden Crate Cube.	4.32 m3
Complete Crated Weight.	Stucco 330 Kg Rock 400 Kg

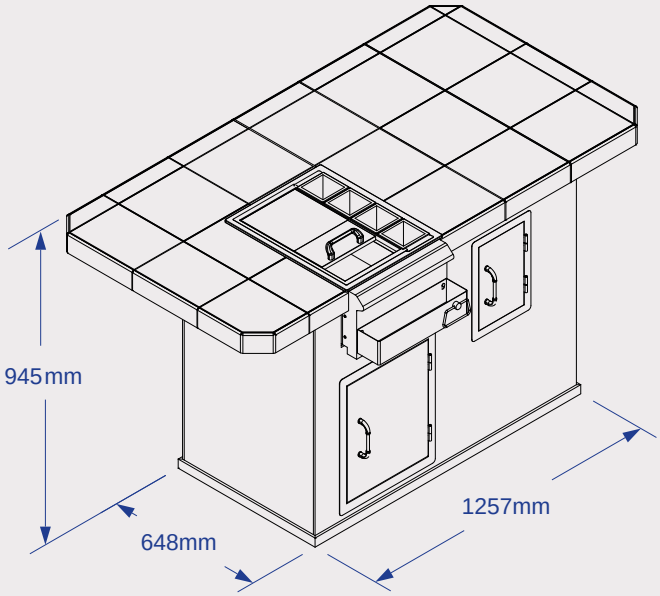

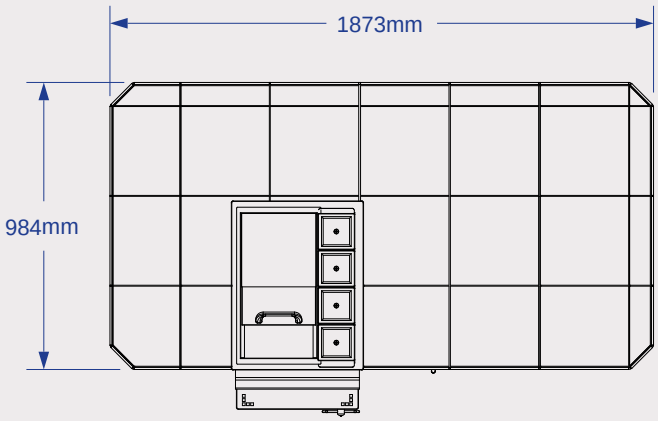

IMAGE DISPLAYED CONTAINS UPGRADED FEAUTURES

STANDARD FINISHES

STUCCO BASE

CREAM

BLUE GRAY

ASPIN

MESA TAN

PORCELAIN TILE TOP

ABADIA

AB COTTO

AB PAJA

ARGON

AR MARANGO

AR PERLA

BOULEVARD

BV REFORMA

BV GRACIA

BV PAULISTA

BV ANDRASSY

HOMESTEAD

HS NOCE

HS BEIGE

** Due to potential colour differences among computer monitors & printers we cannot guarantee that the colour you see on page is an exact colour reproduction of finished product. Colours may also vary between product lot numbers.

BASE FINISH UPGRADES

STUCCO ROCK

WHITE ASH

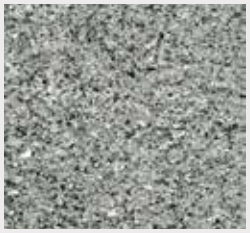

CHAMPAGNE GREY

RIVER ROCK

STONY CREEK

ROCK

GREY STONE

GOLDEN HARVEST

MESA WHITE

** Due to potential colour differences among computer monitors & printers we cannot guarantee that the colour you see on page is an exact colour reproduction of finished product. Colours may also vary between product lot numbers.

GRES FINISHES

BASIC

BASIC BLACK

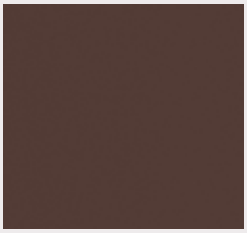
BASIC TABACO

BASIC TAUPE

BASIC MARFIL

INDUSTRIAL

OXIDO NEGRO

MOMA ANTRACITA

MOMA GRIS

DISTRITO MARFIL

WOOD

IRATI CASTANO

IRATI FRESNO

IRATI ARCE

MARBLE

CORALINA BLANCO

ESTATUARIO WHITE

SUPREMO PULIDO

** Due to potential colour differences among computer monitors & printers we cannot guarantee that the colour you see on page is an exact colour reproduction of finished product. Colours may also vary between product lot numbers.

REPAIR & CLEANING TOOLS

Catch the grease from the food you cook on your grills using our Grease Tray Liner's. Easy to install and replace.

60 cm Grill Grease Tray Liner			#24267	
Pack of 3, fits Steer and Plancha Grill.				
Disposable and easy to install, (Size 41 x 38cm).				
CTN Length	0.46 Mts	CTN Height	0.90 Mts	
CTN Width	0.48 Mts	CTN Weight	6.50 Kg	48 Pcs

76cm Grill Grease Tray Liner			#24255	
Pack of 12, fits all 76cm BULL Gas Grills.				
Outlaw Grills. Disposable and easy to install, (Size 53 x 39cm).				
CTN Length	0.58 Mts	CTN Height	0.12 Mts	
CTN Width	0.48 Mts	CTN Weight	1.81 Kg	12 Pcs

97cm Grill Grease Tray Liner			#24256	
Pack of 12, fits all 97cm BULL Gas Grills.				
Disposable and easy to install, (Size 72 x 39cm).				
CTN Length	0.75 Mts	CTN Height	0.15 Mts	
CTN Width	0.45 Mts	CTN Weight	2.27 Kg	12 Pcs

With the Bull Grill Care Kit, keep your Grills and Outdoor Kitchens shiny, clean and new looking. The Grill Care Kit provides you with three Degreasers and one Grill Polish.

Grill Care Kit			#69026CE	
Pack of 4 (3x Degreaser + 1x Grill Polish)				
750ml Stainless Steel Cleaner and 750ml Stainless Steel Polish				
CTN Length	0.23 Mts	CTN Height	0.3 Mts	
CTN Width	0.1 Mts	CTN Weight	3.5 Kg	Pcs

REPAIR & CLEANING TOOLS

The Bull Care and Maintanance Tool Box comes complete with a Stainless Steel Polish, Stainless Steel Cleaner, Microfiber Cloth, Scour and Cleaning Gloves.

Care & Maintenance Tool Box			#69025CE	
SS Polish, SS Cleaner, Microfibre Cloth, Scour and Gloves				
Comes included with every Bull Outdoor Kitchen.				
CTN Length	0.6 Mts	CTN Height	0.25 Mts	
CTN Width	0.46 Mts	CTN Weight	3.5 Kg	Pcs

TOOL SETS

Grill Master Utility Set			#24397	
Chopping board, SS knife, Digital Thermometre and Glove.				
This set makes the perfect gift for the griller in your life.				
CTN Length	0.3 Mts	CTN Height	0.42 Mts	
CTN Width	0.07 Mts	CTN Weight	2.5 Kg	1 Pcs

Professional Pizza Tools Kit			#66035	
Turning Peel, Ash Shovel, Brass Bristle Brush, Ember Remover and Scraper. Stand Included.				
CTN Length	1.40 Mts	CTN Height	0.40 Mts	
CTN Width	0.40 Mts	CTN Weight	15 Kg	1 Pcs

ACCESSORIES

592ml. ReliaBull Tumbler			#12000	
Stainless steel tumbler, Vacuum Insulated technology, keeps beverages hot or cold for an extremely long amount of time.				
CTN Length	0.20 Mts	CTN Height	0.18 Mts	
CTN Width	0.02 Mts	CTN Weight	1.50 Kg	4 Pcs

887ml. ReliaBull Tumbler			#12001	
XL Stainless steel tumbler, Vacuum Insulated technology, keeps beverages hot or cold for an extremely long amount of time.				
CTN Length	0.22 Mts	CTN Height	0.21 Mts	
CTN Width	0.22 Mts	CTN Weight	2.00 Kg	4 Pcs

Neoprene Bottle Koozies	#27001 / #27002
Keep your bottled drinks cool while you cook.	
Available in red #27001 or black #27002.	

Neoprene Can Koozies	#27003 / #27004
Keep your canned drinks cool while you cook.	
Available in red #27003 or black #27004.	

NOTES

NOTES

SKETCH PAD

When you opt for a Bull grill, you're not simply acquiring an exceptional outdoor cooking apparatus – you're making a statement of unmatched quality and service. Crafted from the finest materials and backed by our expert in-house service team, Bull ensures unparalleled support and durability. We confidently affirm that your Bull grill will not only surpass your expectations but also prove to be the ultimate investment, standing the test of time as your last grill purchase.

The Brand Choice for Commercial and Professional BBQ's
E-mail: info@bullbbq.eu / operations@bullbbq.eu
Tel: (+356) 22792077
Web: www.bullbbq.eu
Unit 41, Industrial Estate, San Gwann, SGN3000 - Malta

©2024 Bull Outdoor Products. All Rights Reserved.